Ormandy Rycroft

Heating & Cooling Solutions

ASB

ASE

ASP

ASG

Aquasave Design Range

Installation, Operating & Maintenance Instructions

10 Bar storage
300 to 1,500 Litres

Content

Content cont.

1. Product Overview

The Aquasave (AS) range of semi-instantaneous DHW generators, comprises of:

Aquasave ASE

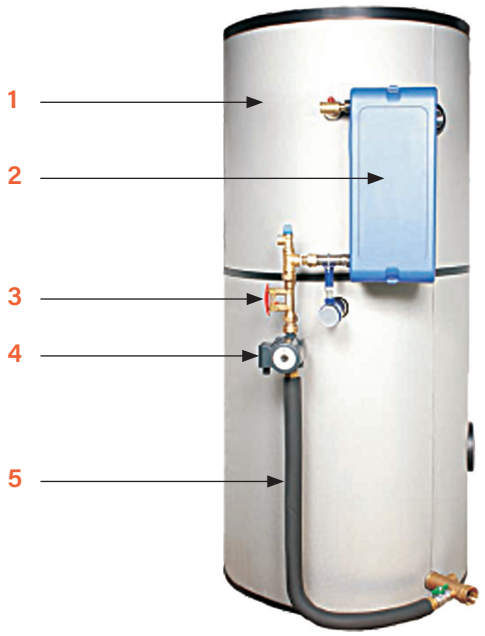

Aquasave ASG

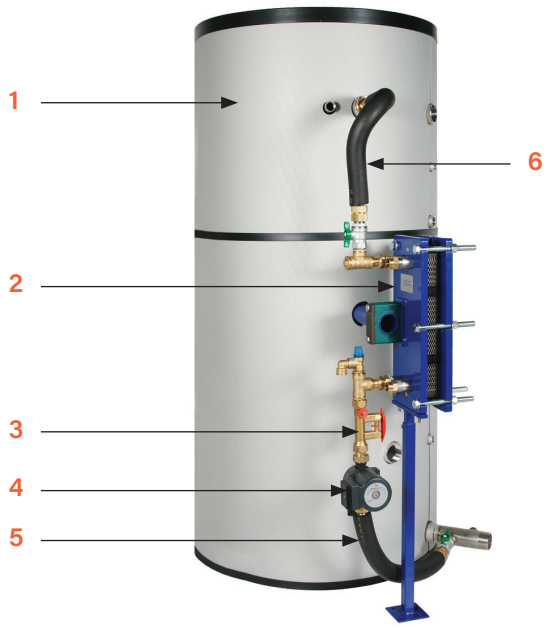

Aquasave ASB

Aquasave ASP

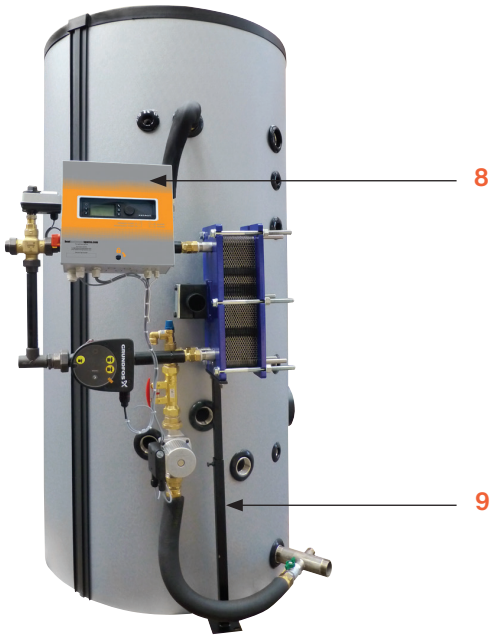

1	Storage tank, 316Ti stainless steel storage tank with a heat insulated cover.	5	Connector hose between tank and the shunt/charging pump thermally - insulated.
2	Plate heat exchanger, 316-grade stainless steel, copper welded, or dismountable plates and gaskets.	6	Connector hose between exchanger outlet and upper tank, thermally insulated (plates and gaskets exchangers only).
3	Float-valve flow controller.	7	Charging kit support.
4	Charging pump.	8	PID Controller.

1.1 Working Pressure and Temperature

Aquasave Model Type	Primary Side		Secondary Side	
	Design working pressure (Bar)	Max temperature (°C)	Design working pressure (Bar)	Max temperature (°C)
ASE	16	130	10	95
ASG	10	110	10	95
ASB	10	110	10	95
ASP	10	110	10	95

1.2 Packing Format

The Aquasave is delivered in three packages:

- Storage Tank
- Insulation
- Exchanger Kit

2. Options

The AS Range is available without controls (ASE & ASG) or with PID controls (ASB & ASP)

2.1 ASE & ASG Series - No Primary Control

- Screw-in connection fixtures

Follow the assembly instructions in *18 Annex 1.*

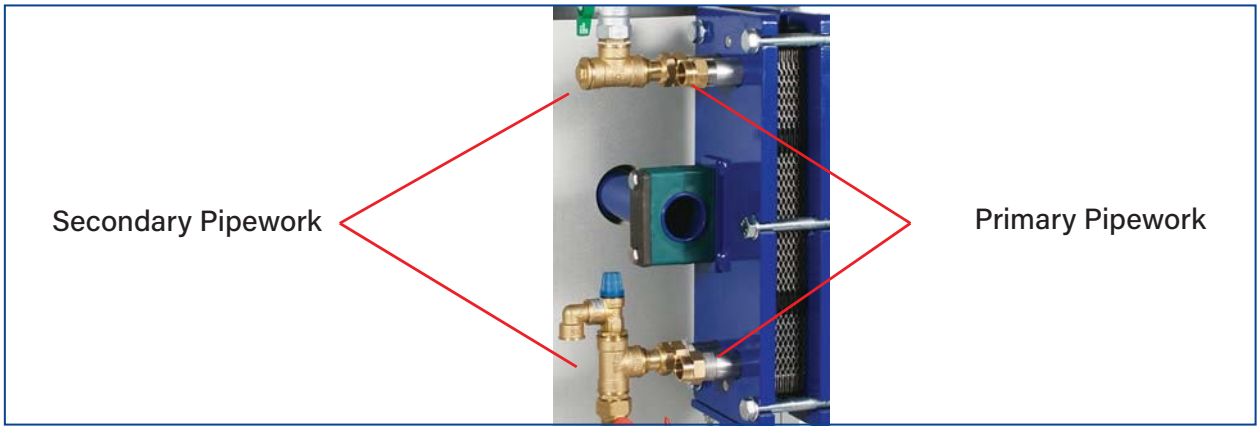

2.2 ASB & ASP Series - (optional) Electrical Two way Control Valve Featuring:

- 1 x two-port PN25 valve body.
- 1 x PT100 temperature sensor.
- 1 x actuator, 230V 3 points with return to zero.
- 1 x PID controller box with piping and support, depending on the model selected.

The primary circuit is pre-assembled on the exchanger. Follw the assembly instructions in *18 Annex 1.*

2.3 **ASB & ASP Series** - (standard) Three way Control Valve Featuring:

- 1 x three-port PN16 valve body.
- 1 x primary pump PN10.
- 1 x actuator, 24V AC feed-in and 0-10V DC controller current.
- 1 x PID controller box with Pt100 temperature sensor
- Primary piping, sized differently, according to heat exchanger type.
- Controller support

The primary circuit is pre-assembled on the exchanger. Follw the assembly instructions in ***18 Annex 1.***

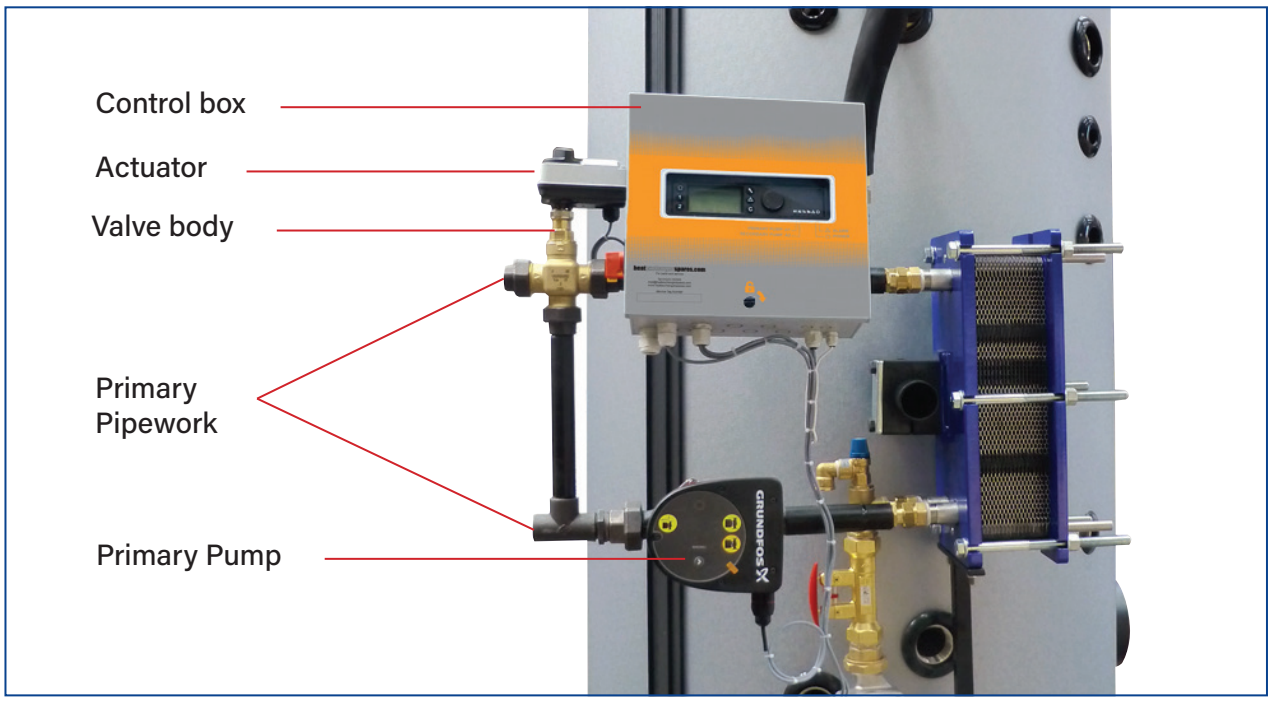

3. Installation

3.1 Siting

The Aquasave AS range of hot water generators should be installed in a dry place (preferably on a sub-base) where room temperature is below 40°C, and ideally in ventilated premises.

3.2 Hydraulic Connections

Connect the charging kit (exchanger + control valve + booster pump) to the storage tank using the interlink kit.

Arrange for fitting the insulation onto the tank before connecting the pipework

The indirect Aquasave range can run without a recirculation system fitted. To avoid creating a galvanic coupling, check that the materials used in the installation have similar corrosion potentials.

3.3 Basic Assembly

Assembly: refer to the instructions given in 18 Annex 1.

Connect the primary inlet-outlet connections on standby.

Connect the cold-water inlet, hot water outlet and the recirculation system to the tank.

Fit the tank with a safety valve, a drain cock in the top section and a draw-off in the bottom section. The valve is a compulsory fixture that must be pre-loaded at the storage tank operating pressure.

Top Section Connection

Exchange support + accessories
(size will vary with exchanger type)

Bottom section connection. Ball valve inserted between the conduit hose and the cold-water inlet fixture.

Fit the tank with a pressure relief valve, a bleeder valve in the top section and a draw-off in the bottom section.

NOTE: The valve is a compulsory fixture that must be pre-loaded at the storage tank operating pressure. It shall have the same diameter as for the cold-water inlet fixture.

NOTE: The relief valve on the charging kit only protects the secondary system – it will neither protect nor surge-feed the installation and the volume stored, in correspondence with local rules.

3.4 Commissioning

- Flood the various circuits and flush-bleed the pumps
- Power-up.
- Set the secondary (charging) flow rate using the TACO valve (read-off + setting)

NOTE:

When first heated, the water in the tank will expand, increasing the pressure.
A water hammer-arrester- type surge tank qualified for DHW systems may be fitted to prevent the relief valve from opening (check the water network pressure).

4. Electrical Connections

All devices must be connected in compliance with the governing standards.

4.1 ASE & ASG Models - No Controls

Wire the charging pump using a short-circuit protection line.

The charging pump must be powered constantly.

4.2 ASB & ASP Models - PID Controls

For more information about the Operator Control box, see chapter 6 Electrical installation of control box, option, and forward.

Power the control box via a single-phase 230 V + ground line with short-circuits protection. Electrical system components pre-cabled according to the hardware ordered.

4.3 Electrical Power Ratings Table

Aquasave Model Type	Primary Pump Type	Primary Pump Consumption W, A	Secondary Pump Type	Secondary Pump Type	Total + Control Box*
ASE & ASG	-	-	UP20-45N	115 Watts, 0.5 A	1.25 Watts, 0.6 A
ASE & ASG	-	-	UPS 32-80N	240 Watts, 1.05 A	245 Watts, 1.15A
ASB & ASP-2 Port Valve	-	-	UP20-45N	115 Watts, 0.5 A	1.25 Watts, 0.8 A
ASB & ASP-2 Port Valve	-	-	UPS 32-80N	240 Watts, 1.05 A	250 Watts, 1.17A
ASB & ASP-3 Port Valve	Magna 1 32-80	151 Watts, 1.22 A	UP20-45N	115 Watts, 0.5 A	266 Watts, 2.02 A
ASB & ASP-3 Port Valve	Magna 1 32-80	151 Watts, 1.22 A	UPS 32-80N	240 Watts, 1.05 A	391 Watts, 2.57A
Single-Phase 230 Volts + Ground					

* The electrical consumption of the control box coupled with the servomotor is 10W, 0.3A. Figures are rounded up to the nearest value. Versions vary according to country.

4.4 Current Limiting Fuses

All work on control box and other electrical components, must be done by qualified people.

Power cards are equipped with fuses labelled FU1 to FU6 on the printed circuit.

Fuse	FU1	FU2	FU3	FU4	FU5
Protection	Pump 1	Pump 2	Pump 3	Pump 4	PCB
Size (mm)	6.3 x 32	6.3 x 32	6.3 x 32	6.3 x 32	6.3 x 32
Calibre	2.5A	-	2.5A		250mA
Voltage	250V	250V	250V	250V	250V

Safety fuses are supplied inside the control box.

5. Setting the DHW Flow Rate

The secondary DHW flow rate is set with the tank full and the primary circuit at nominal operating temperature and at the available exchanger power capacity required for the generator.

1. Fully open the control valve.
2. If a three-way valve is fitted, wait for it to open completely.
3. Adjust the secondary flow circuit, as set out in the table below. The flow rate can be read by pressing on the red push button and reading the index marker against the float.

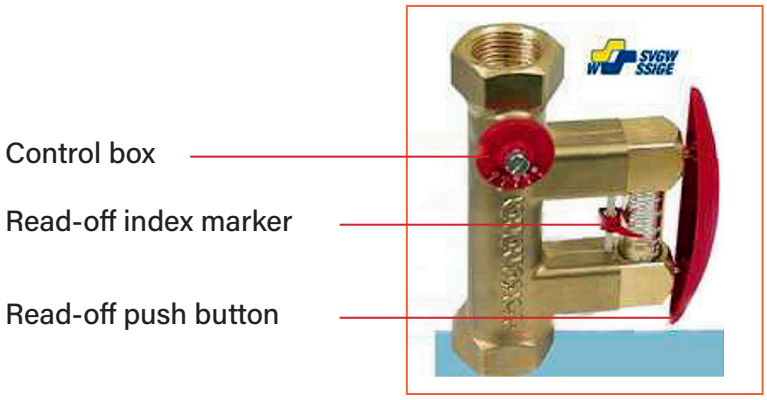

P(kW) DHW T(°C)	30	40	50	60	70	80	90	100	125	150	175	200	240
10 > 55°C	9.5	13	16	19	22	25.5	28.5	32	40	48	56	63	76
10 > 60°C	8.5	11.5	14	17	20	23	26	28	35	43	50	57	68
5 > 70°C	6	9	11	13	15	17	20	22	27	33	38	44	53

The recirculation flow rate must be 60% maximum of the secondary flow rate.

6. Electric Installation of Control Box, ASB & ASP Models

Power supply the control box with 230V 50 Hz + Earth, using electric protection in the main electric power box. Micro 3000 box is a secondary electrical control box.

Human protections and protections against short circuits and over intensity must be installed in the main electric box.

6.1 Regulator Components

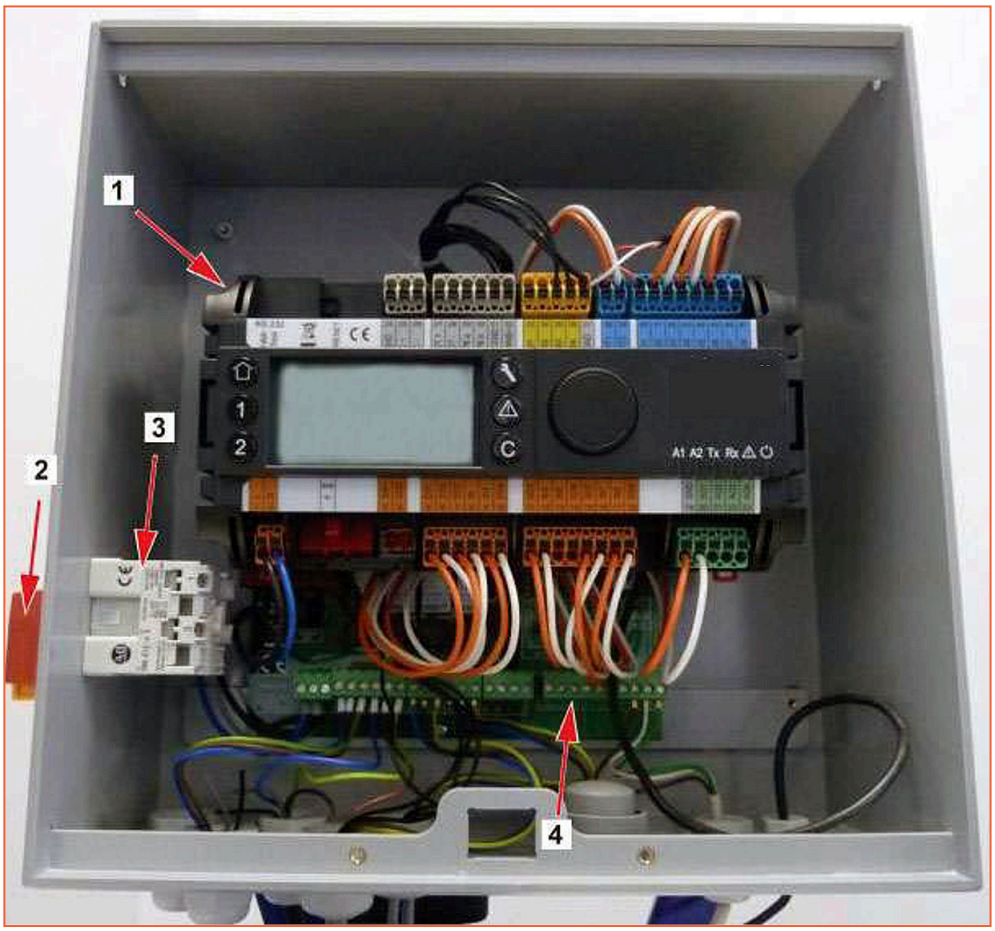

1	Controller, Micro 3000	3	Power Supply
2	Main Switch	4	Printed Circuit Board

6.2 Electrical Wiring Diagram 3 Port (standard)

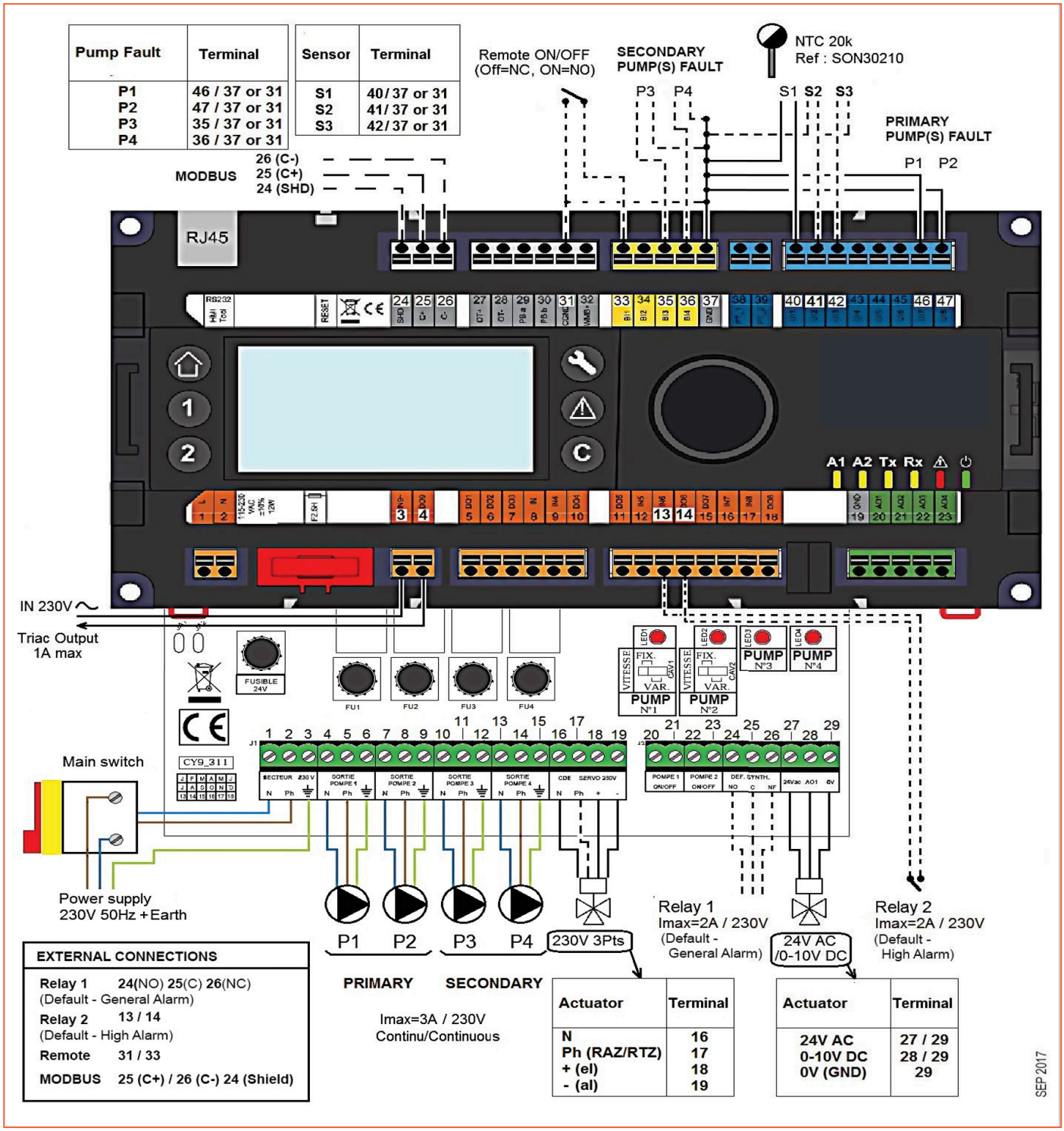

6.3 Electrical Wiring Diagram 2 Port (optional)

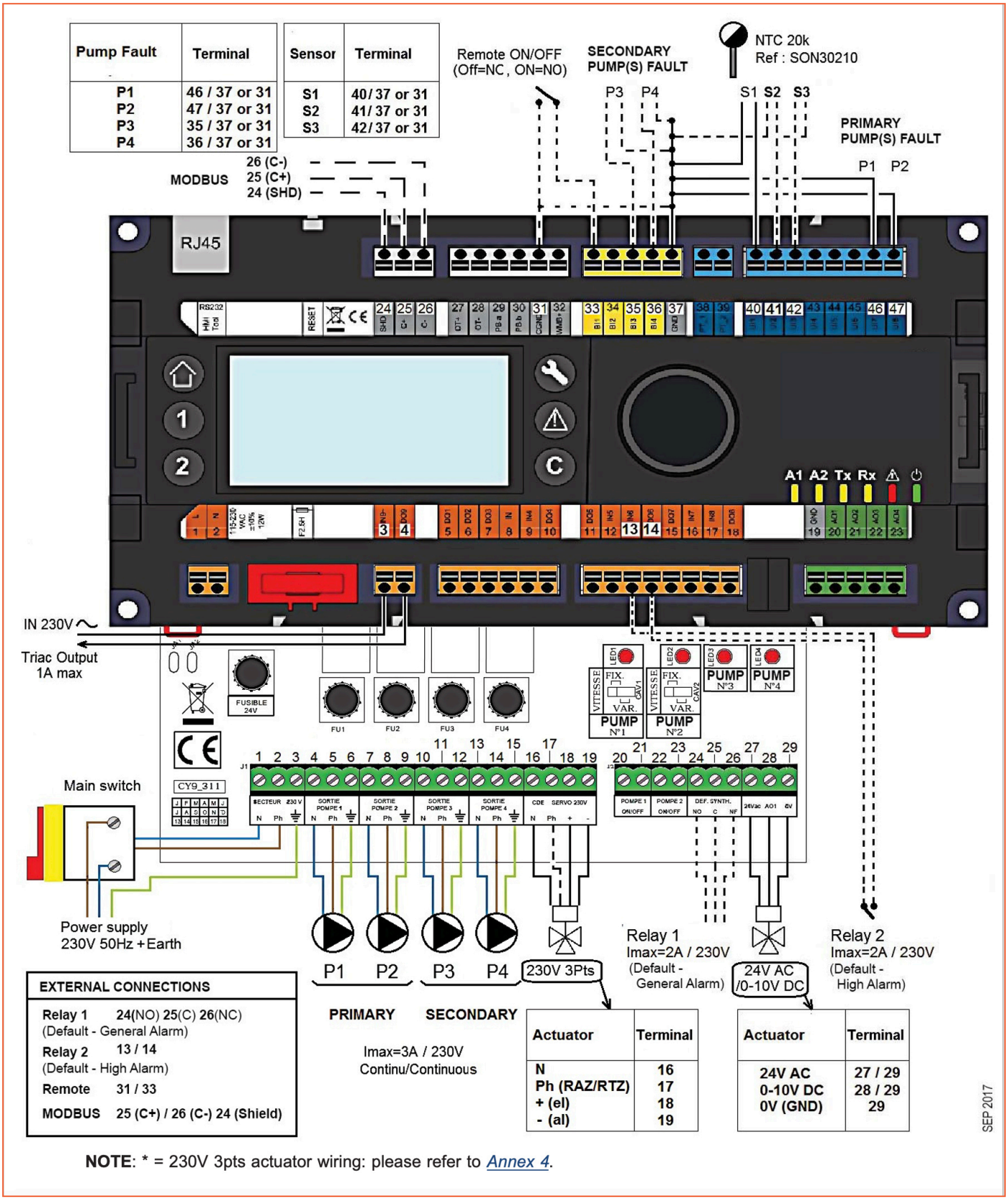

NOTE: * = 230V 3pts actuator wiring: please refer to *Annex 4*.

Button	Function
	Rotary button for scrolling through the menus. Access sub-menus and change settings by pressing it. To activate the line, or change a highlighted value, simply press the wheel. Works like an 'Enter' key.
C	Press to exit a level to the previous menu / parameter. Works like an 'ESC' key.
	Press to access the maintenance / monitoring menu. **NOTE**: Requires a password.
	Press to go to the 'Home' screen, Main menu.
	Press to access the 'Alarm' menu.
1	Not used
2	Not used
A1	Relay 1 activated.
A2	Relay 2 activated.
Tx	Active data transmission.
Rx	Active data reception.
	Alarm indicator
	The contro box is switched on.

6.4 Home Screen

When starting up the Micro 3000 controller, this menu displays on the screen.
The menu is called the Home Screen.

The screen shows the following information:

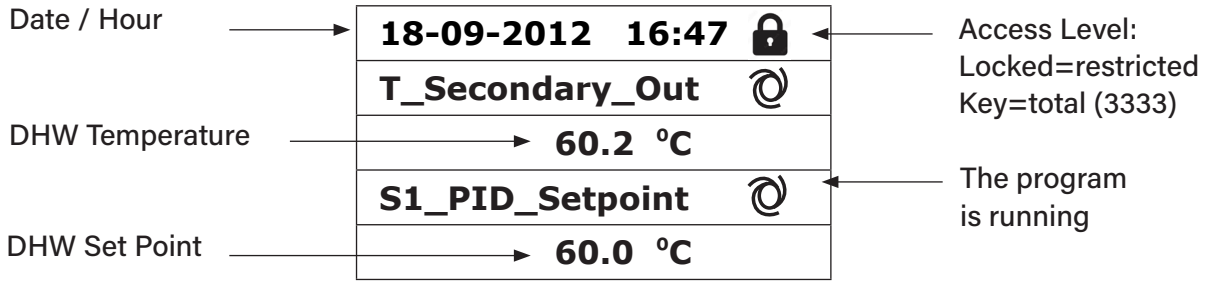

The controller has password protection, allowing access to different menus.

- End user level - requires no login. Marked with a lock in the upper right corner.
- Technician level - access to all menus requires login. marked with a key in the upper right corner.

NOTE: If there is an ongoing alarm when starting up the Aquasave, an alarm text will be displayed on the screen. Press the House button to enter the Home screen.

6.5 Command Symbols

Auto
Datapoint is in automatic operation and can be switched into manual operation.

Manual
Datapoint is in manual operation and can be switched into automatic operation.

Today Function
Datapoint value can be overridden for a particular time within the next 24 hours.
Datapoint must have a daily time program assigned.

Time Program
Datapoint has a daily time program assigned. Daily time program can be selected and edited.

Edit
Item (datapoint, time program etc.) can be edited.

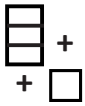

Add
Item (datapoint, time program etc.) can be added to a list e.g., datapoint can be put to a list of trended datapoints.

Deleted
Item can be deleted.

Enable / disable

- Checked: Item is enabled
- Unchecked: Item is disabled

6.6 Setting the time and date

1. Turn the wheel anticlockwise to highlight the line with time and date at the top of the screen. Press the wheel to enter the Date/Time menu.

18-09-2012 16:47	
T_Secondary_Out	
60.2 °C	
S1_PID_Setpoint	
60.0 °C	

2. Press the wheel to change the first variable, the year.
3. When the year flashes, increase, or reduce the set value by rotating the wheel. Once the right value is displayed, press the wheel to confirm the setting. Next parameter to change starts to flash.
4. Proceed in the same way to set the month, date, and time (hour: minute).

Date / Time	
Date:	**18-09-2012**
Time:	**16:49**
Format:	**31-12-2009**
Daylight Saving Time	

Date / Time	
Date:	**18-09-2012**
Time:	**16:55**
Format:	**31-12-2009**
Daylight Saving Time	

6.7 Changing the date format

In the Date/Time menu the date format can be changed. Choose between the following formats:

- yyyy-mm-dd
- **dd-mm-yyyy**
- **dd/mm/yyyy**
- mm-dd-yyyy
- **dd.mm.yyyy**

The formats in bold are the most used in the UK.

Date / Time	
Date:	**18-09-2012**
Time:	**16:56**
Format:	**31-12-2009**
Daylight Saving Time	

6.8 Setting the Daylight-Saving Time

Summertime

Changing between summer/wintertime can be automatic or turned off. You can also define the dates for changes if they are altered.

The default settings for summertime are:
Last Sunday in March to last Sunday in October.

Daylight Saving Time	
Sunday of Month	
Begin:	**Last Mar**
End:	**Last Oct**

6.9 Saving Changes

Once a value has been changed and confirmed by pressing the wheel, the corresponding change will be immediately updated.

Press the C or ⌂ to return to the home screen.

6.10 End User Mode

The following changes can be done in end user mode:

- Settings which are identical/different for each day of the week at defined times.
- Normal temperature(s).
- Lower temperature(s).
- Special period of defined duration during the current year.
- Waiver with change of setting at a specific time.

Please set a hot water production temperature in line with current national legislation and recommendations (UTD, Standards EN, ISO etc.)

All countries have different rules for how hot or cold tap water should be.

Ormandy Rycroft Engineering, recommends the hot water temperature is at least 55°C and a hot water circulation not less than 50°C.

At a temperature below 50°C there is a risk of bacterial growth.

Note that at temperatures above 60°C the risk of scalding increases.

Set points above 63°C result in an increased risk of precipitation of lime scaling on the surface of the heat exchanger.

6.11 Time Programs

The time programs used in AquaSave are adjusted the same way.

The time programs:

- SP_T_Sec_Outlet, to be found in the menu *S1 Menu Secondary Outlet*. It is to set the DHW temperature
- ThTr_Activated to be found in *Thermal Treatment Menu*, to activate a thermal treatment (1 sensor mode).

The time program has two different temperature modes, week-temperature or weekend-temperature. Define for each day of the week which mode to use.

By default the weekend-temperature mode has the same settings as the week-temperature mode.
It is even possible to customize the temperature programs with special dates (holidays periods or free days).

Each temperature mode can have a number of different times set per day. For each time a different temperature can be selected, that are then in effect until the next time occurs. If only one time is set, the program will run with the selected temperature.

6.12 Changing Time and Temperature in a Time Program

By default the DHW set point (SP_T_Sec_Outlet), is set to 60°C by default, at any time, all the days of the week.

Add extra temperature set points at different times of the day.

These changes will be reported to all days within the time program week, excluding the time program; weekend.

1. Use the wheel and mark the clock logo. Press the wheel.

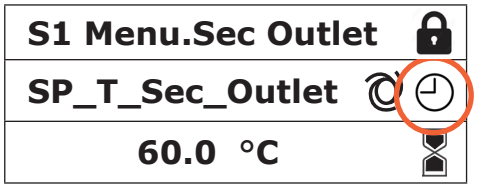

2. Mark the day you want to change. Press the wheel.

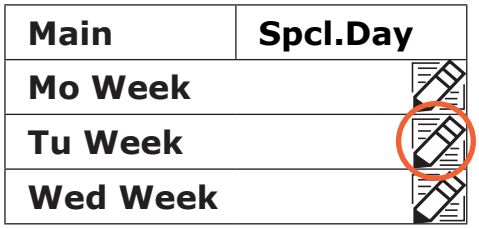

Now you can choose to:

a) Change a time or temperature.
Mark the line and press the wheel. Change the value by turning the wheel.
Confirm the new setting by pressing the wheel.

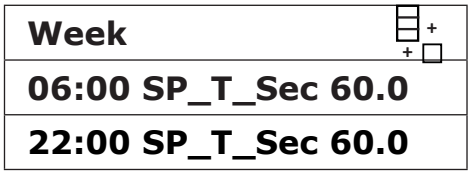

b) Add a new time or set point; choose

c) To delete a time or set point; choose

In this example the set point is 60°C at 22h00.
You can choose to reduce the temperature during the night, in this example the night temperature is set to 55°C.

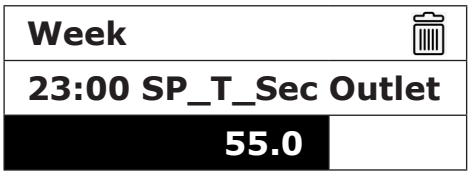

6.12.1 Special Days

Exception days, so called special days, can be defined. The calendar in the controller, controls the exceptions that can be selected in the Time program. Exception days override the weekly schedule.

1. In the Main screen menu, mark 'Spcl.Days' and press the wheel. Choose between:

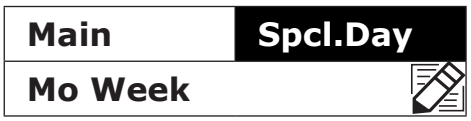

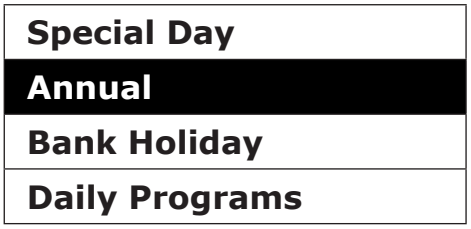

- Annual - holiday periods where you have to specify beginning date, end date and DHW set point. This mode is applicable to schools, offices and so on.
- Bank Holiday - special days during the year where set points can be different eg: Christmas, New Year.
- Daily programs - particular days where you want to change the temperature set point.

6.13 Making a Quick Temperature Change

You can quickly define a “one time” temperature change, a period of the day with a different setting. When the change period has expired, the temperature set point goes back to a standard time schedule program.

1. In the home-screen, mark the hourglass icon and choose it, by pressing the wheel.

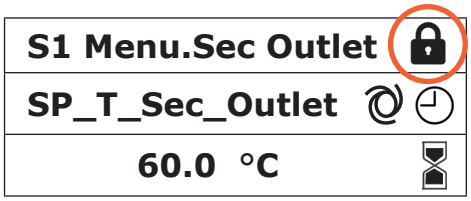

2. Define the starting and ending time, and the temperature set point value.

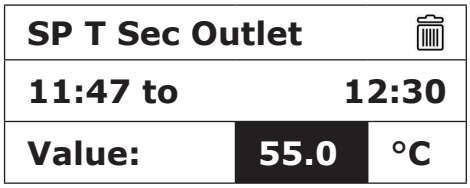

7. Technician Menu, Total Read and Write level

In the Technician menu you can: .

- Make settings for the secondary outlet temperature.
- Enable/disable functions like Eco, booster, thermal treatment.
- Enable/disable the fouling function (option).
- Start an auto test.
- Clear alarm.

You need to be logged in to:

- See all submenus and change pre-set values.
- Have full read and write access in the technician menu.

Note: You will be automatically logged out after ten minutes if no data has been entered.

7.2 The Technician Main Menu

To enter the Main menu you press the key.

The grey marked parameters or menus are not available in the Aquasave application. Their value does not have any impact on the Aquasave.

Main Menu		
T_Secondary_Out	Read Only	Measured temperature ECS
S1_PID_Setpoint	Read Only	DHW temperature setpoint
T_Secondary_Inlet	Read Only	N/A
T_Primary_Outlet	Read Only	The temperature measured by S3 (option)
T_Primary_Inlet	Read Only	N/A
T_Renewable1	Read Only	N/A
T_Renewable2	Read Only	N/A
T_Outdoor	Read Only	N/A
Configuration	Sub Menu	See 7.3 configuration menu
S1 Menu Sec.Outlet	Sub Menu	See 7.4 S1 Menu Secondary Outlet
S2 Menu Sec.Inlet	Sub Menu	N/A
Delta T (S3-S2)	Sub Menu	N/A
S4 Menu Prim Inlet	Sub Menu	N/A
S5 Menu Outdoor T	Sub Menu	N/A
Thermal Treatment	Sub Menu	See 7.5 Thermal Treatment Menu
SAFETY Function	Sub Menu	See 7.6 Safety Function
Eco Booster Fcts	Sub Menu	See 7.7 Eco-Booster Function
Fouling Function	Sub Menu	See 7.8 Scaling Function
Pumps Menu	Sub Menu	See 7.10 Pumps Menu
Solar Menu	Sub Menu	N/A
Aquaprot_Heating		N/A
230V Triac Menu	Sub Menu	See 7.9 230V Triac Menu
Auto Test	Sub Menu	See 7.11 Autotest Menu
Clear Alarm(s)	Sub Menu	See 7.12 Clear Alarm Menu

7.3 Configuration Menu

NOTE: After resetting the controller, this sub menu should be accessed to configure the number of pumps.

Parameter	Factory Default Setting	Optional Setting	Description
S1 activated	1	0 Disables / 1 Enables sensor	Set to 1
S2 activated	0	0 Disables / 1 Enables sensor	Set to 0
S3 activated	0	0 Disables / 1 Enables sensor	Set to 0
S4 activated	0	0 Disables / 1 Enables sensor	Set to 0
S5 Active Heating	0	0 Disables / 1 Enables heat curve	Set to 0
Cooling Mode AO1	0	0 = Heating/	Set to 0
P12 Nbr of Pumps	1/0	0/1/2	Primary pump(s) number
P34 Nbr of Pumps	1	0/1/	Secondary pump(s) number
Modbus Coeff	1	1/10/100	1=integer value, e.g., 58°C 10=1 decimal, e.g., 583/10=58,3°C 100=2 decimals, e.g., 5836/100=58,36°C
Relay 1 function*	1	0.7	0=No action 1=General Default (GD) 2=High temp alarm (HA) 3=Eco function (E) 4=Booster function (B) 5=Thermal Treatment (TT) 6=Pump Fault (PF) 7=Tank loaded (TL) Requires sensor S2
Relay 2 function	2	0.7	
Renewable Config	Keep 0	N/A	N/A
Pilot Inverted	Keep 0	N/A	N/A
SP distrib	0	N/A	0=Internal Setpoint 1=External Setpoint
FIRMWARE_Version	xx	N/A	Firmware Version

* Both relay 1 and 2 are programmable

7.4 S1 Menu Secondary Outlet

Parameter	Factory Default Setting	Optional Setting	Description
SP_ T_Sec_ Outlet +	60°C	DHW Setpoint	Change setpoint value in clock program
Delta T S1 HiAlm	10°C	0 - 50	SP_T_Sec_Outlet+Delta Ts1 HiAlm
High T Alarm Tempo	1 min	0 - 60	High temp alarm is effective after this temporisation.
High Alarm Auto Reset	0	0 / 1	0 = MANUAL alarm clear / 1 = AUTO alarm clear
High_Alm_Reset	Off	Off / On	Put ON to clear a high temp alarm, then put off.
P_Main Prop Band	20	In general 20<P< 40°C	☐ P to be less reactive
	(-100 à 100)	Negative values in cooling	☐ P to be less reactive (be careful of "pumping" effect).
I Main Integral	50	0 - 120	☐ P to be less reactive
			☐ P to be more reactive (be careful of "pumping" effect).
D Main Derivative	2 sec	0 - 50	
Seq_Valve_life	N/A	Internal Settings	Not accessible

7.5 Thermal Treatment Menu

This function is activated as per a time program. It is disabled by default.
The user must define a one sensor mode - fixed duration as per Therm.Tr duration parameter.

Parameter	Factory Default Setting	Optional Setting	Description
ThTr_Setpoint	70°C		Usual value
TrTh_Activated +	Off	Off / On	Enable or disable the function as per clock program.
Sensor_Nbr	1	Auto/1 sensor/ 2 sensors	Use 1 sensor
ThermTr duration	1 min	1-240 min (4 hours max)	Adjust value according to the installation + buffer vessel capacity.
Fixed duration (1 sensor)	1	0/1	Set to 1
TT Max try time	1 min	1-240 min (4 hours max).	Not used
DeltaT S1S2 ThTr	7°C	1 - 20°C	Not used
Inhibition time	30 min	0-180 (0 to 3 hours)	High temp alarm inhibition time after thermal treatment

7.6 Safety Function

This function activates the four pumps power relays at the same time, without considering ipsothermic contacts' inputs.

Note: This function can be enabled from base access level.

Parameter	Factory Default Setting	Optional Setting
SAFETY_Speed	75%	Not used
SAFETY FCT	Off	Off / On

In case of high temperature alarm on S1, the primary pumps are stopped, even if the function is activated.

7.7 Eco-Booster Function

One or both functions can be activated at the same time.

Note: The Booster function is not available in Aquasave.

- **ECO**: Activates a temporisation Eco Temporisation, as soon as valve is closed less than hysteresis valve (called Eco Valve Hyst) and DHW is higher than {Setpoint - "Eco Hysteresis"} parameter. After this temporisation, the start/stop contact of primary variable speed pumps OR primary cst speed pumps' power supply is stopped.
- **Booster**: If DHW temperature is dropping down faster than "Booster Gradient", the second primary pump (if existing) is energized, to increase the primary flow rate. Function stops when DHW temperature is back to the setpoint value and after "Booster Tempo" parameter.

Parameter	Factory Default Setting	Optional Setting	Description
1: Eco 2: Booster 3: EcoBoost	0	0/1/2/3	0 = No function 1 = Eco Function only 2 = Booster function only 3 = Accumulated two functions
Fct_Selection	Normal	Normal/Eco/Boost/ EcoBoost	Playback function selected in 1: Eco 2: Booster 3: EcoBoost
Eco Delay	10 min	1-30 min	Temperature hysteresis keeping the Eco function activated.
Eco Hysteresis	5°C	1 - 20°C	Temperature range in which the function is applicable.
Valve Hysteresis	4%	1 - 10%	Maximum oening of the valve before switching function.
Booster Delay	2 sec	0 - 30 sec	Additional holding time of the second pump to stop the function.
Booster Gradient	1°C/s	1 - 5°C/sec	Minimum temperature fall speed at which the function operates.

7.8 Scaling Function

Scaling function can be activated when the sensor S3 is connected. Accessing the scaling-menu requires login at Technician level.

If the temperature in S3 is too high for a long time this function activates an alarm that consider the heat exchanger fouled.

Parameter	Factory Default Setting	Optional Setting	Description
Fouling alm activ	0	0/1	0 = disabled / 1 = enabled
Fouling_alarm	Norma/Default		Read only
SP_Fouling	65°C	60-80	Depends on the HE types and Primary inlet temperature.

7.9 230V Triac Menu

Accessing the 230C Triac-menu, requires login at Technician level.

This menu allows using a 230VAC Triac output.

Parameter	Factory Default Setting	Optional Setting	Description
Multi P +	Off	Off / On	Enable or disable the 230V output as per clock program.
Pulse Duration	5 sec	1-3600	230V pulse duration in seconds
BypassS4S3	N/A	N/A	N/A
DeltaT bypass	N/A	N/A	N/A

7.10 Pumps Menu

P12 = Primary Pump(s) P34 = Secondary Pump(s) Parameter	Factory Default Setting	Optional Setting	Description
P12 Diff. work time	100 hrs	1 - 1000 hours	P1 or P2 working time.
P12 Permut.Type	2	0 = Fixed time	0: See P12 Permut Hour
		1 = Fixed time + diff. work time	1: If diff reached at this time, pump shift.
		2 = Immediately after Diff.hrs	2: Permutation Day+hour not required.
P12 Permut.Period	0	0 = None 1 = Daily 2 = Weekly 3 = Monthly	
P12 Permutation Day	1	From 1st to 31st	Available only if "P12 Permut Period" = 3"
P12 Permutation Hour	10h00 pm	00h00 - 23h59 (11h59 pm)	Pump shift time
P1P2 Superposition	6	0-10 seconds	Time to start P2 (P1) before stopping P1 (P2), to let the other pump start.
P34 Diff.work time	100 hrs	1 - 1000 hours	P3 or P4 Working time.
P34 Permut.Type	2	0 = Fixed time	0: See P34 Permut Hour
		1 = Fixed time + diff. work time	1: If diff reached at this time, pump shift.
		2 = Immediately after Diff.hrs	2: Don't care of Permutation Day+hour
P34 Permut.Period	0	0 = None 1 = Daily 2 = Weekly 3 = Monthly	
P34 Permutation Day	1	From 1st to 31st	Available only if "P34 Permut Period" = 3"
P34 Permutation Hour	10h00 pm	00h00 - 23h59 (11h59 pm)	
P3P4 Superposition	6	0-10 seconds	Time to start P3 (P4) before stopping P3 (P4), to let the other pump start.
Pump_Fault_Reset	Off	Off/On	To clear a pump default, set to On, then Off.

7.11 Autotest Menu

This submenu allows testing analog and digital outputs. It is possible to run an automatic sequence or to test manually each output individually. In case of Auto test (automatic sequence), it is possible to reduce or increase tests' temporizations. Pump, valve, and relays test times can be adjusted individually. The time test value will impact on the total auto test time sequence.

Accessing the Autotest menu requires login at Technician level.

In this menu an auto test can be started that will activate binary and analog outputs, to activate valve, alarm relays, 230V Triac. It is also possible to read/write these different values manually.

Parameter	Factory Default Setting	Optional Setting	Description
Start Auto Test	0	0/1	Set 1 to start auto test. When finished, the value goes back to zero
Pump time test	16 sec	1-60 sec	Not used
Valve time test	16 sec	1-60 sec	Temporisations to adjust test duration
Alarm time test	5	1-60 sec	Individual output reading / writing
Cmd_P1	On/Off		Actively relay 1 (pump 1)
Cmd_P2	Off/On		Actively relay 2 (pump 2)
Speed_P1P2	xx %	0-100 %	Not used
Cmd_P3	On/Off		Actively relay 3 (pump 3)
Cmd_P4	Off/On		Actively relay 4 (pump 4)
Speed_P3P4	xx %	0-100 %	Not used
High_Temp_Alarm	Off	On/Off	Individual output reading / writing
Main_Alarm	Off	On/Off	
Triac_Output	Off	On/Off	
Valve signal	xx %	0-100 %	
Valve2 signal	xx %	0-100 %	
3 Pts valve signal	xx %	0-100 %	

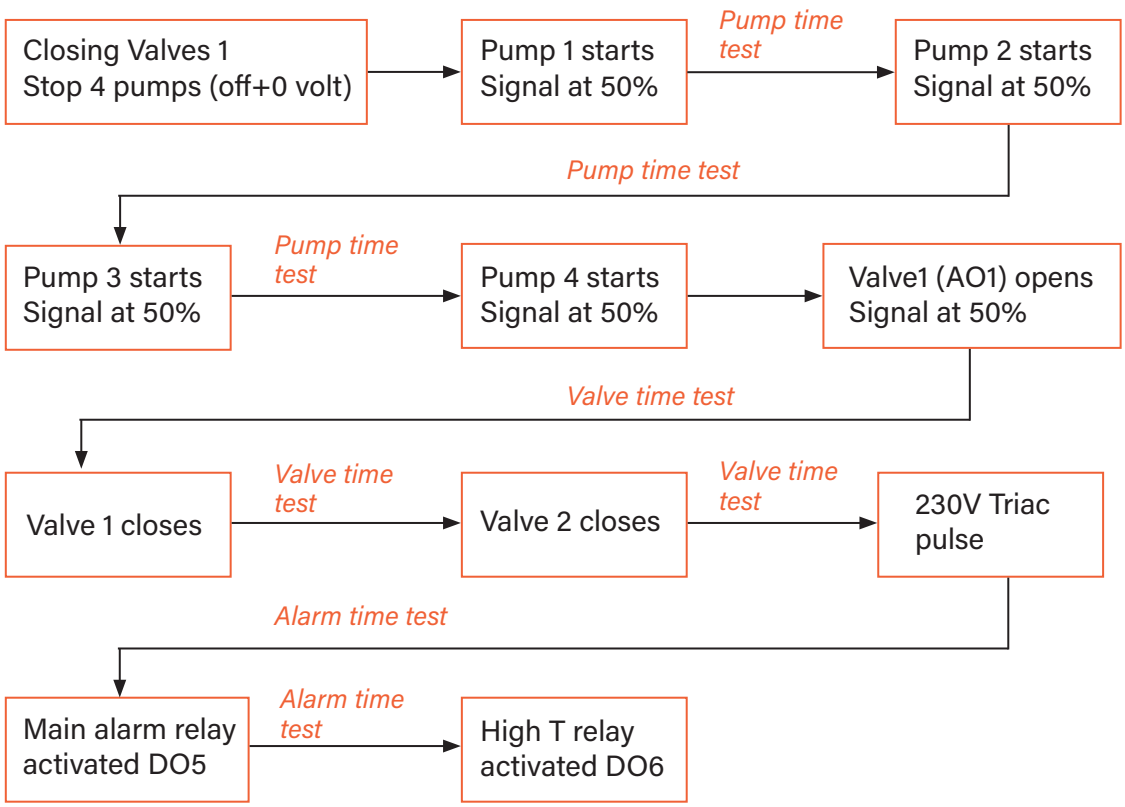

Note: A pump fault may occur after Auto test. In this case, clear the alarm according to 7.12 Clear alarm menu

7.12 Clear alarm Menu

Accessing the Clear Alarm menu, requires login at Technician level.

All alarms are cleared the same way.

Parameter	Factory Default Setting	Optional Setting	Description
High_Alm_Reset	Off	Off / On	Select **On** to clear the alarm, then return to **Off** or wait a few seconds for automatic return to **Off**. Off: the alarm is cleared.
Pump_Fault_Reset	Off	Off / On	Select **On** to clear the alarm, then return to **Off** or wait a few seconds for automatic return to **Off**. Off: the alarm is cleared.

8. Service Menu

Press the key to enter the service menu. In the service menu, you can:

- Change password for technician level.
- Trending parameters.
- Display the trend buffer.
- Check operating hours.

From Point Data sub-menu, you can, read or change binary or analog outputs to start/stop a pump, open/close control valve for example.

8.1 Clear alarm Menu

Note: To change the password, you need the password for the Technician level, level 3.

1. Press key to access to Service Menu. Go to "Login Installer". then press the wheel.
2. Enter the current password. Press he wheel to validate.

Service Menue
Continue
Login Installer

3. Mark "Change password", then press the wheel.

Enter your password
****
Next
Change Password

4. Go to Level 3 line and then click on the password to change it. Press the wheel to validate.

Change Password	
Level 2:	**2222**
Level 3:	**3333**
Installer Service	

Note: Level 2 password is not in use.

8.2 Login Installer

Login Installer	****		Enter 3333 if not in technician mode
	Change password		

8.3 Menu Continued

Menu	Sub-menu	Sub menu	Description
Continue	**Operating hours**		Viewing operating hours of internal parameters.
	Trending	**Points in trend**	Selected variables to trend, for example, temperature sensors.
		Display trend Buffer	View the records
	Interface Config (com)	**C-bus active**	Factory pre-set
		Ctr#1 9600	Factory pre-set
		B-port 9600	Factory pre-set
		Append bus	Factory pre-set
		RF Teach in (N/A)	Factory pre-set
	Time Program	**Solar**	Not used
		Main	It is SP_T_Sec_Outlet (main temperature program). *See 7.4 S1 menu Secondary Outlet.*
		TSP_Amb	Not used
		Multi Pulse	Not used
		Therm. treatment	*See 7.5 Thermal Treatment Menu*
	Point Data		Internal parameters +I/O visualisation
		Analog Input	Sensor values
		Pseudo Analog	Can be set points or internal parameters
		Analog Output	Valve and pump output signals
		Binary Input	Ipsothermic contacts from pumps, remote contact
		Pseudo Binary	Internal flags
		Binary Output	Pump start / stop contacts, relays contacts, 230V Triac
		Totalizer	N/A
		Remote Analog	N/A
		Remote Binary	N/A
	System Data		System information
		Parameters	N/A
		Date / Time	Clock settings
		System Info	Hardware / software info (version, date)
		Interface Config	Hardware / software info (version, date)
		DDC Times	Programs time constant
		Flash Memory	Info on flashing

8.4 Operating Hours

Operating hours for the following variables can be checked:

- Therm_Protec_P1/P2/P3/P4
- Cmd_P1/P2/P3/P4
- High_Temp_Alarm
- Main_Alarm
- AFF_leg_active SAFETY_FCT
- ThTr_Activated

For more information and descriptions, see 10 Parameter list.

1. Press key to access to Service Menu, then go to “continue”.

Service Menue
Continue
Login Installer

2. Select “Operating Hours” in the menu.

The first time you enter this menu, the list is empty.

Service
Operating hours
Trending
Interface Config
Time Program

3. To add a variable to trend, choose

4. Mark one variable to follow and press the wheel.

Activate Oper. Hours
Cmd Distant
Therm_Protec_P1
Therm_Protec_P2

Activate Oper. Hours
Therm Protec_P4
Cmd_P1
Cmd_P2

5. Validate the variable by ticking in the Operating Hours box. If this box is empty the variable is in the list, but it is not recorded.

Operating Hours ☑

When you go back in the menu (C Key), you can see the list with “Cmd_P1” parameter, and on the right side, the operating hours.

Cmd_P1
Operating Hours ☑

Operating Hours (h)	
Cmd_P1	**0**

For more details, click on the line to open the sub-menu.
Here you can read that P1 has been operating less than 1 hour, has been switched one time and status is On.

Proceed the same way to add extra variables.

Cmd_P1	
Operating Hours	☑
Hours:	0
Switches:	1
Status:	On

8.5 Trending Parameters

A lot of different variables can be recorded or trended. It can be temperatures' measurement, valves, or pumps' signals, ipsothermic contacts, alarms, thermal treatments etc.

1. Press key to access to Service Menu, then click on "Continue.

Service Menue
Continue
Login Installer

2. Select "Trending" in the menu.

Service
Operating hours
Trending
Interface Config
Time Program

3. Select "Points in Trend"; choose
   The first time you enter this menu, the list is empty.

Trending
Points in Trend
Display Trend Buffer

4. To add a variable to trend; choose

5. Mark the variable to follow and press the wheel.
In this example the Secondary outlet temperature, S1.

Set Points in Trend
Pilot_Signal
Pt1
Pt2
S1

6. Validate the variable by ticking in the Trend Log box. If this box is empty the variable is in the list, but it is not record.

S1	
Trend Log:	☑
Trend Hyst:	1
Trend Cycle:	0 min

There are two different ways to record (method a and b):
a) Only the temperature change is recorded. This saves memory and allows a longer sampling period compared to method b.

Select the record hysteresis. In our case, every 1°C temperature change is recorded. You can change the hysteresis value by clicking on it.

b) Record on a time base, whether the temperature changes or not. Note that this method consumes memory, especially if a long-time base is selected. Here is the time base selected to 10 minutes recording (1 record every 10 minutes).

S1		
Trend Log:	✓	
Trend Hyst:	1	
Trend Cycle:	10	min

For method "a" set "Trend cycle" different to zero, for method "b", set "Trend Hyst" different to zero.

8.6 Display the trend buffer

1. Press key to access to Service Menu, then click on "Continue".

Service Menue
Continue
Login Installer

2. Select "Trending" in the menu.

Service
Operating hours
Trending
Interface Config

3. Select "Display Trend Buffer".

Trending
Points in Trend
Display Trend Buffer

4. Select the variable to display, S1 in this case, and press the wheel.

Trend Buffer
S1

Date, time and temperature at the time, can be read.
For example, on 21st of September at 14h22, the temperature of S1 was 58°C

S1		
21-09	14:22	58
21-09	14:22	60
21-09	14:22	59
21-09	14:22	57

9. Alarm Menu

Alarm indication: Is Volt Free Contacts (VFCs), 2 Amps maxi, each under 230 V.

Press key to access to Alarm menu. The menu contains four different lists:

- **Alarm Buffer**
  Lists all events with, date, time and type of event.
- **Points in Alarm**
  Lists all events with alarm condition.
- **Critical Alarms**
  Lists all alarms with critical alarm condition.
  Critical alarms are important alarms, like high temp.
- **Non-Critical Alarms**
  Lists all non-critical alarm condition.
  These alarms are more information, like power failure.

For example, in the alarm buffer, you can read:

15.52	SAFETY_FCT
15.51	SAFETY_Speed
15.41	SAFETY_Speed
15.40	SAFETY_FCT

Note that the alarms are listed with the latest at the top.

Press a line to see more information about the alarm.

Displayed	Meaning
19-06-2012 15.52 SAFETY_FCT On Auto Operation	The safety function has been set to auto mode, stopping the safety function at 15h52.
19-06-2012 15.51 SAFETY_Speed 100% Auto Operation.	The safety speed has been set in Auto mode at 100% at 15h51.
19-06-2012 15.41 SAFETY_Speed 75% Manual Operation	The speed pump has been set manually to 75% at 15h41.
19-06-2012 15.40 SAFETY_FCT On Manual Operation	The safety function has been activated manually the 19th of June 2012 at 15h40.

10. Parameter List

There are more than 100 different variables used in the controller. Most of them are used for internal programs and calculations. Here we describe the main points.

Name	Description	Unit	Modbus Address*
Therm_Protec P1	Ipsothermic input from P1 pump	0/1	11
Therm_Protec P2	Ipsothermic input from P2 pump	0/1	12
Therm_Protec P3	Ipsothermic input from P3 pump	0/1	13
Therm_Protec P4	Ipsothermic input from P4 pump	0/1	14
Cmd_P1	P1 command. It is the pump start/stop output	On/Off	15
Cmd_P2	P2 command. It is the pump start/stop output	On/Off	16
Cmd_P3	P3 command. It is the pump start/stop output	On/Off	17
Cmd_P4	P4 command. It is the pump start/stop output	On/Off	18
PriP1_Alarm_On	Primary pump 1 default	0/1	21
PriP2_Alarm_On	Primary pump 2 default	0/1	22
Sec_P3_Fault	Secondary pump 3 default	0/1	25
Sec_P4_Fault	Secondary pump 4 default	0/1	26
Main_Alarm	General Alarm	0/1	28
High_Temp_Alarm	High temperature alarm on S1 sensor	0/1	29
Fouling_Alarm	Fouling heat exchange alarm	0/1	30
Ret_High_Alarm	High temperature alarm on S2	0/1	31
ThermTr_Alarm	Thermal treatment failed	0/1	32
SAFETY_FCT	The safety function state	0/1	35
ThTr_Activated	Thermal treatment running	0/1	36
Remote_Control	The unit is remotely controlled	0/1	37
BOOSTER	Boost function activated	0/1	41
ECO	ECO function activated	0/1	42
Tank Load	Tank loaded (Sensor S2 need to be connected)	0/1	44
Valve	Primary valve actuator	0-100%	47
S1_10	Secondary outlet temperature measurement (S1 sensor)	°C	50
S2_10	Secondary Inlet temperature measurement (S2 sensor if present)	°C	51
S3_10	Primary Outlet temperature measurement (S3 sensor if present)	°C	52
S1_PID_Setpoint	Current temperature set point of the main control loop on S1	°C	62
High_Alm_Reset	To reset a high temperature alarm	On/Off	201
Pump_Fault_Reset	Resets a pump fault	On/Off	202
AFF_Legio	Thermal treatment function On/Off	On/Off	203
SP_T_Sec_Outlet	Domestic Hot water Setpoint (S1)	°C	211
THTR_Setpoint	Thermal treatment temperature set point	°C	213

* Please refer to “MODBUS” section in the next pages.

11. Factory Reset

Press both and C for 5 seconds. Display appears as shown here. Rotate the wheel; select the last line (program name with a star at the end). Press the wheel a few seconds and the program will start after 1 minute. Settings are now factory settings.

15-10-2012		13.41
Wiring Check		
C-Bus		✓
CTR#	1	19200
AL 09 2ST		12-10-12*

After a reset must the controller be configured, see *7.3 Configuration menu*. Especially the number of pumps must be configured.

Note that on some software versions, the displayed language can be changed. Rotate the wheel clockwise to display English or French. Select and press the wheel. Then, press on “Factory” line to start the controller.

02/07/2013		15:27
Startup		
C-Bus config		✓
CTR#	1	38400
Select Language:		

English (1)
French

12. Modbus Add On

12.1 Modbus Communication

The controller includes a Modbus slave communication protocol.

Connection between BMS (building management system) and Micro 3000 requires two polarized wires on C+ and C-, respectively labelled 25 and 26 on controller C Bus terminal.

The connection via shielded cable is not required but can be performed with the terminal 24. For this, it is necessary to unscrew the front panel.

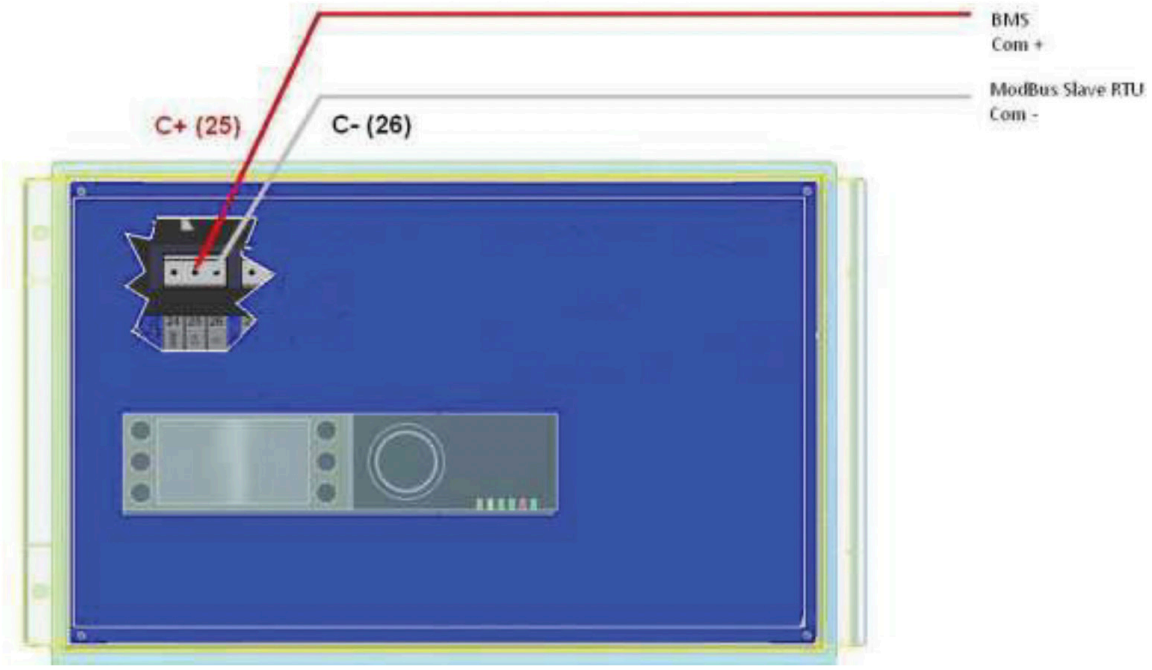

12.2 Connecting multiple Micro 3000 control boxes

Rules to respect

Max length between BMS and farer control box: 500 meters

Connection continuity (C+ and C-) must be done directly on the controller C Bus terminal, without using derivation boxes. Respecting this, there are two wires per terminal, except in the last control box.

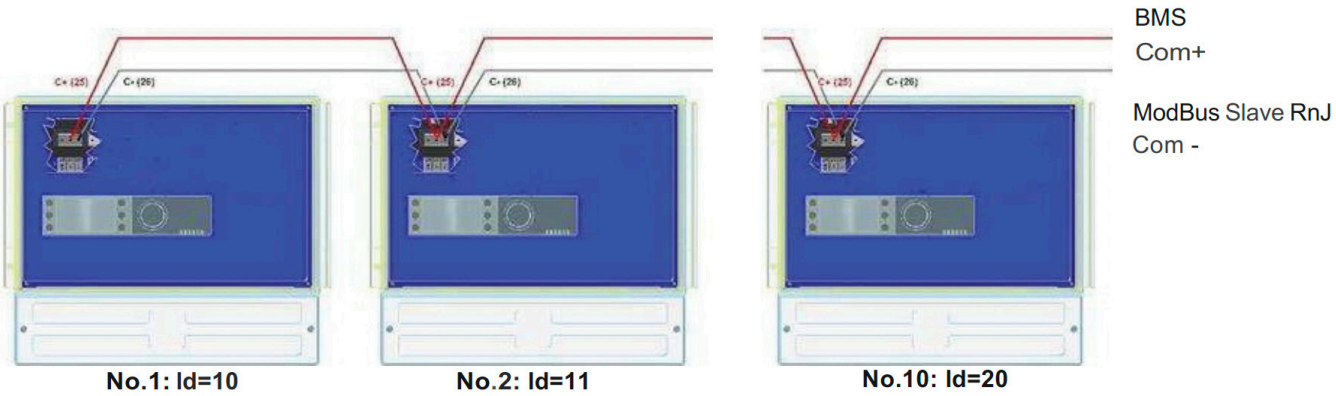

12.3 Modbus Slave Communication Parameters

Modbus Parameters	Speed	38400
	Bit Number	8
	Stop bit	1
	Parity	None
	Mode	RTU

In case of multiple controllers, change ModBus slave number.

Read Only FDigital						
Modbus Points	**Modbus Address***	**Type**	**Sub Type**	**Mode**	**Value**	**Comment**
PD_Cmd_P1	15	HR_16	BOOL	R	0=Off, 1=On	Command P1
PD_Cmd_P2	16	HR_16	BOOL	R	0=Off, 1=On	Command P2
PD_Cmd_P3	17	HR_16	BOOL	R	0=Off, 1=On	Command P3
PD_Cmd_P4	18	HR_16	BOOL	R	0=Off, 1=On	Command P4
PriP1_Alarm_On	19	HR_16	BOOL	R	0=OK, 1=Alarm	Pl Fault
PriP2_Alarm_On	20	HR_16	BOOL	R	0=OK, 1=Alarm	P2 Fault
SecP3_Alarm_On	23	HR_16	BOOL	R	0=OK, 1=Alarm	P3 Fault
SecP4_Alarm_On	24	HR_16	BOOL	R	0=OK, 1=Alarm	P4 Fault
PD_High_Alarm	27	HR_16	BOOL	R	0=OK, 1=Alarm	S1 High Temp Alarm
PD_Main_Alarm	28	HR_16	BOOL	R	0=OK, 1=Alarm	General Default
Fooling_Alarm	30	HR_16	BOOL	R	0=OK, 1=Alarm	Fooling Alarm (S3)
Reserved for future use	32	HR_16	BOOL	R	0=Off, 1=On	Reserved for future use
PD_Triac_Output	33	HR_16	BOOL	R	0=Off, 1=On	230V Triac. Ongoing
SAFETY_FCT	35	HR_16	BOOL	R	0=Off, 1=On	safety Function
AFF_Leg_Active	36	HR_16	BOOL	R	0=Off, 1=On	Therm. Treat. Ongoing
Remote_Control_Rev	37	HR_16	BOOL	R	0=Off, 1=On	Remote Control
AFF_FD20	39	HR_16	BOOL	R	0=Off, 1=On	Heating Mode
AFF_FD22	40	HR_16	BOOL	R	0=Off, 1=On	Cooling Mode
BOOSTER	41	HR_16	BOOL	R	0=Off, 1=On	BOOSTER Active
ECO	42	HR_16	BOOL	R	0=Off, 1=On	ECO Activated
PD_Pumps_Fault	43	HR_16	BOOL	R	0=Off, 1=On	Synthesis Pump (s) Fault
Tank_Load	44	HR_16	BOOL	R	0=Off, 1=On	Tank Loaded
(16 bit integer)*						

Read Only Analogic						
Modbus Points	**Modbus Address***	**Type**	**Sub Type**	**Mode**	**Value**	**Comment**
PA10_Valve1	47	HR_16	int16	R	%	Control valve 1 signal
S1_10	50	HR_16	int16	R	°C	Sensor 1 measurement
S2_10	51	HR_16	int16	R	°C	Sensor 2 measurement***
S3_10	52	HR_16	int16	R	°C	Sensor 3 measurement***
S1_PID_SP_10	62	HR_16	int16	R	°C	Calculated S1 setpoint
(16 bit integer)*						

Read-Write					
Modbus Points	**Modbus Address***	**Type**	**Sub Type**	**Mode**	**Comment**
High_Alm_Reset	201	HR_16	BOOL	R/W	1=Reset fault. Pulse point necessary, 30 seconds On/Off
Pump_Fault_Reset	202	HR_16	BOOL	R/W	1=Acquittement. Point immpulsionnel On/Off pendant 30 seconds
(16 bit integer)*					

Read-Write Analogic/Lecture						
Modbus Points	**Modbus Address***	**Type**	**Sub Type**	**Mode**	**Value**	**Comment**
SP_T_Sec_Outlet	211	HR_16	int16	R/W	°C	S1 fixed setpoint (DHW)
THTr_setpoint	213	HR_16	int16	R/W	°C	Thermal treatment setpoint
(16 bit integer)*						

* For some supervisors, it is necessary to implement BOOL as int16
** For some supervisors, remove 1 to address number (ex: S1_10 address=49
*** If present

13. Trouble Shooting

Findings	Probable Causes	Remedies
Pump not operating	Locked rotor or damaged	Force to rotate. replace if required
	Corresponding led is not lit	Replace Power Board
	Pump relay damaged	Replace Power Board
	Pump protection fuse blown	Check, then replace if necessary
	High Alarm condition detected	Clear alarm, then reset system
	No voltage to control board terminals	Check power supply cable and fuses
	No voltage to pump motor terminals	Check protection fuse on main board, cable condition and connections
	Controller improperly set	Contact After Sales Service
Low temp alarm condition	Primary pump stopped	see “pump not operating”
	Too low primary temperature	Check for closed valve in the primary
	Too high tap water flow rate (S1)	Reduce buffer vessel charging flow rate
	Set point too high. 3-way valve remains closed	See “Modulating valve does not operate”
Modulating valve does not operate.	Damaged or broken actuator	Test and replace if necessary
	Broken or improperly tightened coupling	Check and replace if necessary
	Valve blocked	Replace
	No signal from the controller	Check, then replace if necessary
	Supply wires improperly tightened	Check wires, re-tighten connections
	Actuator stroke restricted	Dismount, then clean the valve
High alarm condition detected	Charging pump stopped (S1 versions)	Refer to, “Pump not operating”, above
	Low recirculation flow rate)I version)	Check and fix problem
	Alarm differential too low	Check and set the controller
	Modulating valve not closing	Refer to previous box above
	Too much differential of pressure across the modulating valve	Check the way the TWM is piped up. Mixing arrangements should be used
Correct temperatures across the exchanger not obtained. Valve and pumps operating satisfactorily	excessive exchanger scaling at the primary or secondary side	Open and clean he exchanger according to cleaning instructions
	Primary pipework obstructed or strainer upstream clogged	Inspect primary pipe work. Clean strainer on the primary side
	Isolation valve closed	Open isolation valves.
	Air presence in the primary	Purge. Check no high parts where air could be trapped, exist
	Excessive pressure drops	Check pipe size is suitable for nominal flow rate
Temperature does not increase in the buffer vessel and the tap water value is correct	Recirculation flow rate exceeds charg-ing flow rate	Check and measure charging and recirculation flow rates. adjust when necessary
		Recirculation FR < 0.6 x Charging FR

14. Maintenance and Repairs

We recommend that you take out a low cost annual service contract from Heat Exchange Spares.com, which covers all parts and labour. Please contact us for more information (see section 17.1). The frequency of the inspection, depends on the water hardness, temperature and flow rate.

Weekly Inspections

- Check for leaks on pipes and components.
- Check that the operation control system is stable and that the temperature does not fluctuate. Temperature hunting causes unnecessary wear of valves, actuators.

Annually

- Check the control box electrical connections tightening.
- Check the control valve that no leaks are detected.
- Check the flooded-rotor circulation pumps electric current requirement.
- Clean and disinfect the system at least once a year. *See 14.1 Antibacterial treatment of the Aquatank*.

Regularly

- The cleaning schedule for the exchanger will depend on the quality of the water and how much demand is placed on the system.
- Flush-out the tank on a regular basis.
- Check regularly that the safety devices (like relief valve, etc.) are working properly.
- Lime scaling on the connected devices, Scaling of the secondary side will be evidenced by:
  - A high pressure drop on the secondary side of the exchanger.
  - Improper temperature range on the secondary side of the exchanger.
  - Low temperature difference between inlet and outlet on the primary side of the exchanger when the control valve is fully open.

Only replace any defective parts with HeatExchangerSpares.com supplied spare parts.

Maintenance work must be carried out by a qualified and authorised technician

Hazard of severe electrical shock or burn.
Before cleaning and servicing, disconnect power supplies.

Risk of burns. Let the pipes cool down before starting out with maintenance work.

14.1 Antibacterial Treatment of the Aquatank

Clean and disinfect the system at least once a year.

Whenever the buffer tank or exchanger circuits are to be drained, it is crucial to let the water cool down to preclude any risk of scolding or burns.

The Aquatank is fitted with a dismounting inspection hole.

In order to work on the inside of the tank, use the valves to isolate the exchanger kit, isolate the installation's power circuit, close-off the cold water inlet, and drain out the tank. Access is through the inspection hole, once the tightening screws have been loosened.

NOTE: Comply with all currently applicable governing standards of, cleaning and disinfecting the system at least once a year.

Compulsory preliminary steps include to:

- Neutralise the Aquasave's electrical equipment (electrical control box, charging pump, primary circuit pump) and the recirculation systems that can no longer output, since a valve has been shut-off (e.g. loop-back pump).
- Hydraulically isolate the DHW part and drain out the vessel.

14.2 Clean the Heat Exchanger Plates* (ASP & ASG models)

DO NOT USE hydrochloric acid or any acid that could corrode stainless steel plates.

DO NOT USE water with more than 330 ppm Cl when making a cleaning solution.
Nitric (for calcium carbonate), sulfamic (for calcium sulphate) or citric (for silt) acids can be used. Concentration should not exceed 4% at 60°C. Protective gloves and glasses should always be worn while doing these operations.

Carefully rinse the plates with clean water after cleaning.

1. Measure the tightening lengths of the exchanger (distance between two frames plates).
2. Open the exchanger by loosening and removing the support anchor bolts.
3. Remove the plates without damaging the gaskets and readjusting their orientation and position.
4. Clean the plates, being careful not to damage them. Do not use metal implements, use a metal-free nylon brush.
5. Lime scale can be removed by soaking the plates in a correctly-dosed acid solution.
6. Refit the plates in the same order and position, as when they were disassembled (plates & clip-on gaskets heat exchangers).
7. Tighten up the exchanger, using the tightening length as initially (plates & clip-on gaskets heat exchangers).
8. Make sure the thermometer pocket of the control sensor is also cleaned properly.

Note* Cleaning of the plate heat exchanger by others during the warranty period will void the warranty. This work should only be carried out by Ormandy Rycroft or their agents, Heat Exchanger Spares.com.

14.3 Clean the fusion-bonded or copper brazes , plate heat exchangers (F/B series)

Only the specially designed, pre-fitted cleaning kit and compatible agents should be used for cleaning, fusion-bonded or soldered plate heat exchangers.

Protective gloves and glasses should always be worn while doing these operations.

Use the specially-engineered plugs and isolate the secondary circuit using the gate valves. Unclip the heat insulator at the top and bottom of the exchanger.

Isolate the exchanger and use the special connective fittings for cleaning, removing the plugs. CIP connector: 3/4"

- The circulator systems and pumps require no specific maintenance action.
- The motor-driven control valves do not need any particular maintenance. Run annual checks to ensure that the valve glands do not show signs of leakage.
- The control box requires no specific maintenance action. Run an annual check to make sure the electrical connections hold tight.

14.4 Open the control box

Remove the front panel by turning the lock button counter clockwise and lift up the cover.

Then, unscrew the two screws in bottom and lift up the black panel.

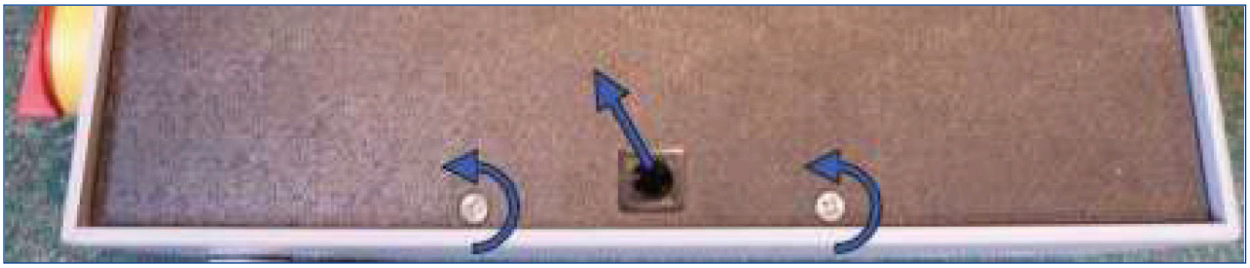

14.5 Change Fuses

The control box is fitted with a set of fuses to protect the different components against overload.
Extra fuses are included in the control box for quick servicing.

The service work must be carried out by an authorized service technician.
Turn off the power supply before starting to work.

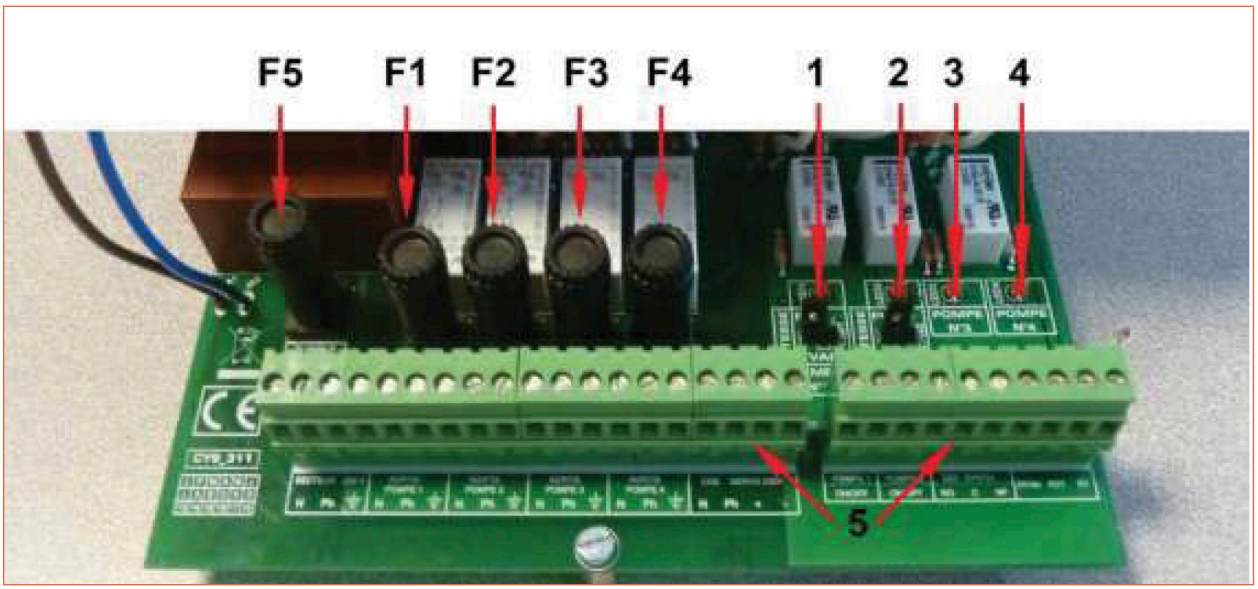

F5	Fuse F5
F1	Fuse F1
F2	Fuse F2
F3	Fuse F3
F4	Fuse F4

1	LED 1, lit when pump P1 is power supplied
2	LED 2, lit when pump P2 is power supplied
3	LED 3, lit when pump P3 is power supplied
4	LED 4, lit when pump P4 is power supplied
5	Terminal block

For technical information about the fuses, *see 4.4 Current limiting fuses*.

14.6 Pumps number

The pump configuration and connections is factory made.
In a servicing situation the correct pump must be identified.

Codification	Meaning	Connected pump(s)
2PE kit	1 charging pump	P3
3PE kit	1 primary pump + 1 charging pump	P1 + P3

14.7 Add an extra sensor

Please see *6.2 Electrical wiring diagram.*
S1-S3 are temperature sensors, NTC20k.

14.8 230V Triac Output

The 230V electrical output can be configured as a pulse function. For example it can be used to shortly activate an electrical drain valve.

In this configuration, you can program pulse duration, day, week or special days you want this to happen.

For example each Sunday at 10h00 for 5 seconds

See 7.9 230V Triac menu.

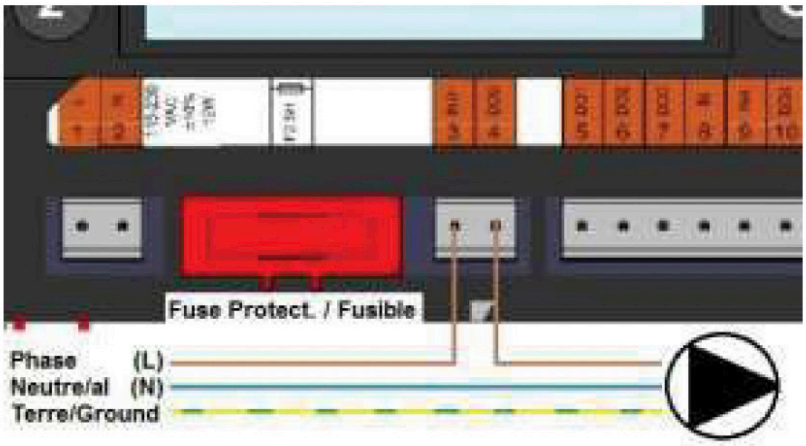

Connected device must not exceed 230VAC 1A.

14.9 Relay 1 and 2 contacts

Relay 1 can be NO (normally open) or NC (normally closed).

Relay 2 is always NO (normally open).

Connect the relay 1:

Operating Mode	Connections on PCB bottom terminal
No	C-NO (25-24)
NC	C-NF (25-26)

Connect relay 2 to the controller terminal 13 (IN6) and 14 (OUT6).

See 6.2 Electrical wiring diagram.

If using 230V phase through this contact, do not exceed 2A load.

14.10 Remote Control contact

The Aquasave can be operated by a remote controller. To enable that, connect a volt free contact between BI1 and GND.

Wire Terminal Name	Wire Terminal Number
BI1	33
GND	31 0r 37

See 6.2 Electrical wiring diagram.

15. Commissioning Report

Installation							
Tightening Dimension Control							
Air Vent Position							
Settling Pot presence on primary							
Boiler Brend, Installation and Power							
Mixing bottle required / presence							
Balancing valve presence on indirect (semi-instantaneous) installations							
Close drain valves							
Primary conformity							
Secondary conformity							
Accessibility of unit and components							
Configuration Menu							
Sensors							
Pumps							
Other							
Primary Pumps				Secondary pumps			
Pump 1		Pump 2		Pump 3		Pump 4	
Electrical bridges control for pumps on power plate							
Pump 1		Pump 2		Pump 3		Pump 4	
Control valve working							
Settings							
DHW secondary outlet T° settings: S1							
PID setting							
High alarm setting		Manual				Auto	
Thermal Treatment:		Type:		Setting:		Time:	
Eco function activation							
Booster function activation							
Other functions activated							
Relay 1 functon							
Relay 2 function							
Trending and/or Modbus valve activated							
Volt free Remote contact wired or not							
TRIAC 230V connections wired or not							
Other comments							

Identification of the unit			
Unit ID No.	**Installer/Company Name**	**Installation Site**	**Date**

16. Declaration of Conformity

Manufacturer

Ormandy Rycroft Limited, Duncombe Road, Bradford BD8 9TB

Heat exchanger system for plates and gaskets for the production of hot water.

Products	Models
Aquasave AS Range DHW Generators	Honeywell / Grundfos / Other Brand

Low Voltage Directive (LVD) 73/23/EEC followed by 2006/95/EEC/

The following norms have been applied:

-EN 60335-1 partly
-EN 60204-1 partly

Conformity assessment Procedure and Sound Engineering Practice

As part of Ormandy Rycroft and Ormandy Newade's unwavering commitment to maintaining high-quality standards and ensuring full compliance with the Pressure Equipment Safety Regulations 2016 (PEsR 2016) and Pressure Equipment Directive 2014 (PED 2014/68/EU), we employ a rigorous process to verify all vessel designs. These verification procedures are based on well-established industry standard calculations, which ascertain whether our products meet the minimum requirements outlined in Categories I to IV of the aforementioned documents.

It is essential to understand that there are five distinct categories governing our vessel designs:

1. Sound Engineering Practice (SEP)
2. Category I
3. Category II
4. Category III
5. Category IV

Among these categories, Sound Engineering Practice (SEP) holds the lowest level of stringency and therefore cannot be associated with a Declaration of Conformity. Categories I through IV, on the other hand, are designed to meet the requisite standards and can be supplied with the appropriate Declaration of Conformity.

It is crucial to note that the categorization determined through these calculations is immutable. Consequently, it is not possible to alter a design from SEP to Category I or vice versa. The integrity of each design category is preserved in accordance with industry regulations

DHW/R Product Manager (signature)

17. Warranty

Our equipment comes with a 12-month warranty from the date of shipment. This may be extended to an addtional 6 months from the date of commissioning of the equipment, subject to commissioning by Heat Exchange Spares.com. The warranty period is limited to 18 months from the actual date of shipment from the factory. The manufacturer's liability is limited to the replacement of any defective part that cannot be repaired. No other financial compensation may be claimed in any case under the warranty The nature and probable cause of the defect must be reported to the manufacturer before any action is taken. The defective part should then be returned to our Factory or Head Office for assessment unless written agreement to proceed otherwise has been obtained from Ormandy Rycroft Engineering. The results of the assessment can only state whether or not the terms of the warranty apply.

Exclusion factors:

Non-compliance with the guidelines for installation, configuration and maintenance:
Over pressures, water-hammer, scaling, noncompliant water quality

Also excluded from the warranty:

- Fitting costs, refitting costs, packaging, transport, and any accessories or equipment not supplied by Ormandy Rycroft Engineering, which will only be covered by any warranties issued by said third-party manufacturers.
- Any damage caused by connection errors, insufficient protection, misapplication or faulty or careless operations.
- Equipment disassembled or repaired by any other party than Ormandy Rycroft Engineering or HeatExchangerSpares.com.

Non-payment will lead to all operational warranties covering the delivered equipment being terminated.

17.1 How to contact us

Our contact details are updated on our website www.ormandygroup.com

Head Office: **Ormandy Rycroft Engineering Limited**, Duncombe Road, Bradford BD8 9TB

Tel: +44 (0)1274 490 911

Email: sales@ormandygroup.com

Website: www.ormandygroup.com

For parts, servicing and service contracts.

HeatExchangerSpares.com Limited
PO BOX 230, Watford, Herts. WD18 8AF, UK.

T: +44 (0)1923 232335

E: mail@heatexchangerspares.com

www.heatexchangerspares.com

18. Annex 1

18.1 Assembly of the charging kit to the Aquatank

1 Start by fitting the insulation onto the tank.

The insulation has to be mounted before the tank is definitively connected up.
Refer to the guidelines of the Aquatank instructions manual.

2. **Exchanger kit**
Shown here, the 3P kit, primary circuit threeway valve, controller and circulation system.

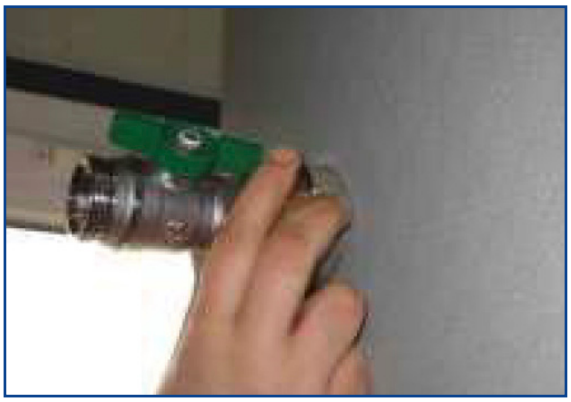

3. Install the hot water outlet fitting on the top vertical tank connection.

4. Mount the cold water inlet fixture onto the bottom vertical tank off-take. If necessary, use the sleeve provided to install the fixture if the tank tubing is configured as male.

5. Once the bottom fixture has been fitted, install the gate valve and the hose connector.

6. Screw the support coil into the one-ended tank sleeve. On 300-L models, use the lower-left sleeve.

7. Then place the locking ring on the support coil

8. Set an initial position by fitting the threaded rod of the support into the tube and screwing the union connector at the exchange outlet into the pre-fitted tank gate valve.

9. Readjust the assembly to make sure the exchanger is perfectly vertical and parallel to the tank shell. Once this is done, tighten the support ring blocking screws.

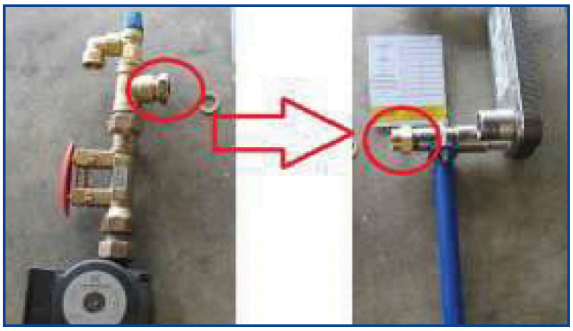

10. Then sit the pump / control valve / relief valve assembly opposite the secondary circuit exchanger inlet (bottom-left connection). Do not forget the flat gasket. The two parts are assembled using a union connector installed on the pump sidee.

Electrically connect the pump to the control box or header cabinet, depending on the equipment.

11. Install the exchanger insulation jacket by assembling the 2½ shells and fixing them together with the plastic clips at the top and bottom of the exchanger. The charging kit should look like the one in the photo.

The final step is to install the connector hose hydraulically linking the bottom of the tank to the pump suction system.

12. Connect the upper flexible pipe to the pump.

13. Repeat the procedure to link the bottom of the hose to the cold water inlet fixture located toward the base of the tank.

The charging kit is now mounted on the storage tank. At that point, it may or may not be equipped with a pre-mounted primary kit like the one shown in the photo opposite.

Now establish electrical and hydraulic connections to the exchanger's primary circuit. Follow the instructions given in chapter *19 Annex 2.*

NOTE: The photos are non-binding and for illustative purposes only - changes are liable to made without notice.

18.2 Specific points for assembling the M3 charging kit

18.2.1 Step 6 to 8

The kit is anchored onto a support sleeve via a clamp collar that should be positioned to the middle of the sleeve before being adjusted and tightened. Use the adjustable support fixture on the exchanger when guiding the kit into the correct position.

The kit is anchored onto a support sleeve via a clamp collar that should be positioned to the middle of the sleeve before being adjusted and tightened. Use the adjustable support fixture on the exchanger when guiding the kit into the correct position.

Connecting up the top-section hose:

Go through the same procedures as for the bottom-section hose.

Final assembling shown below.

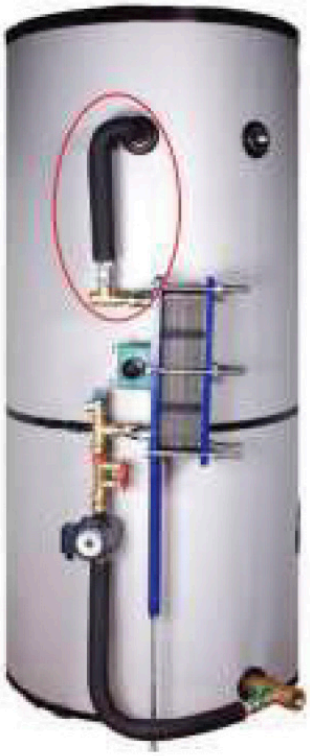

NOTE: For the 300L Tank, use the TOP-SECTION support

18.3 How to fix the flexible hose onto the tank







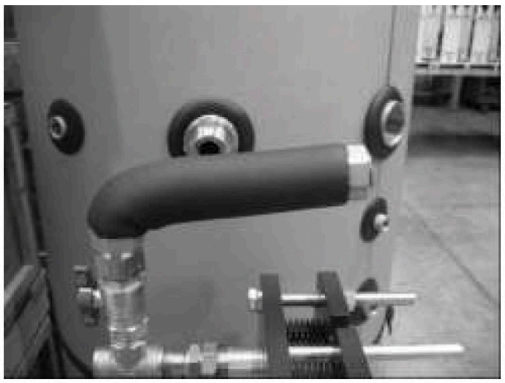






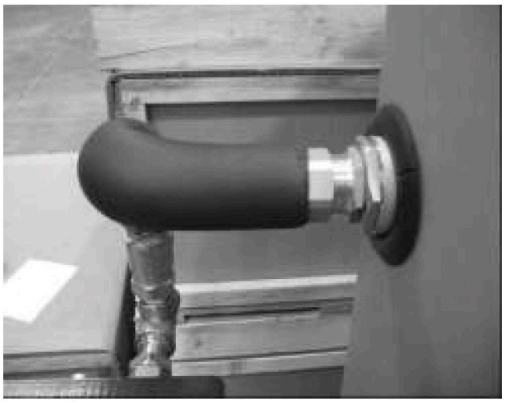

19. Annex 2

19.1 Block Diagrams

ID	Name
A	Primary Inlet
B	Primary Outlet
V	Gate Valve

ID	Name
CW	Cold Water
DC	Drain Cock
VR	Control Valve

ID	Name
PRV	Pressure Relief Valve
PC	Booster Pump
PR	Recirculation Pump

19.2 ASE & ASG models - No controls

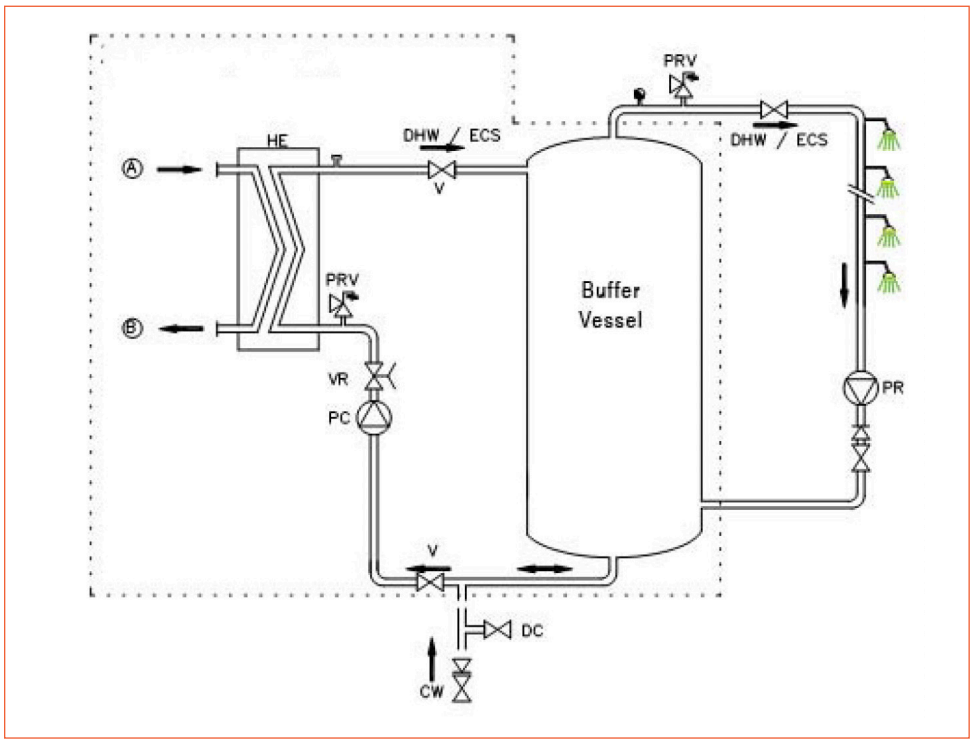

19.3 ASB & ASP PID control 2 Port Valve (optional)

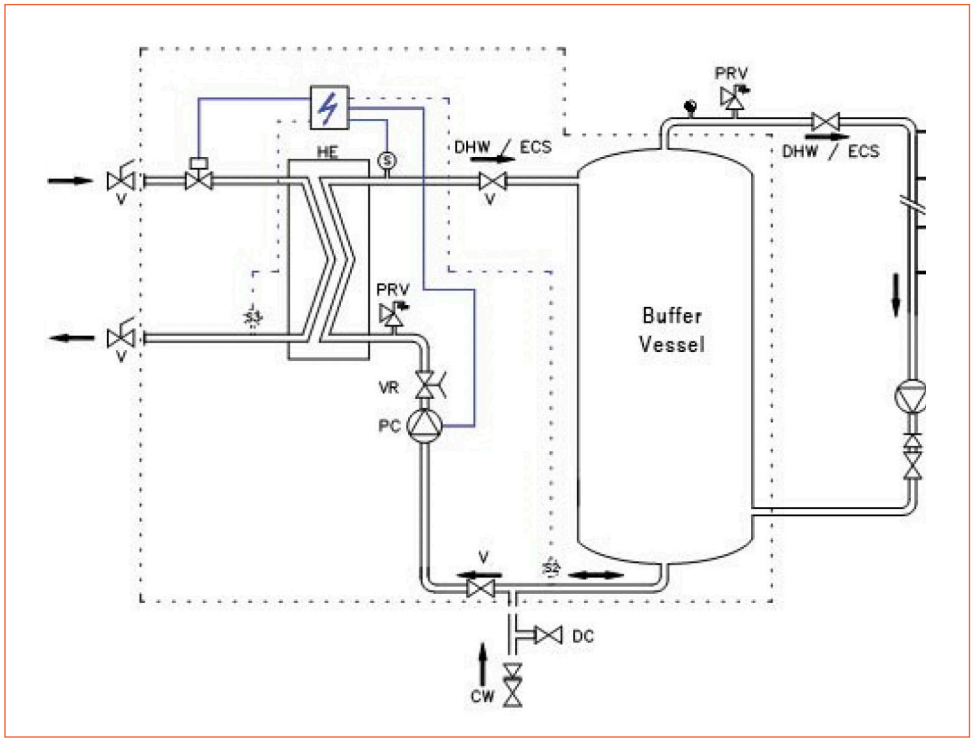

19.4 ASB & ASP PID control 3 Port Valve (as standard)

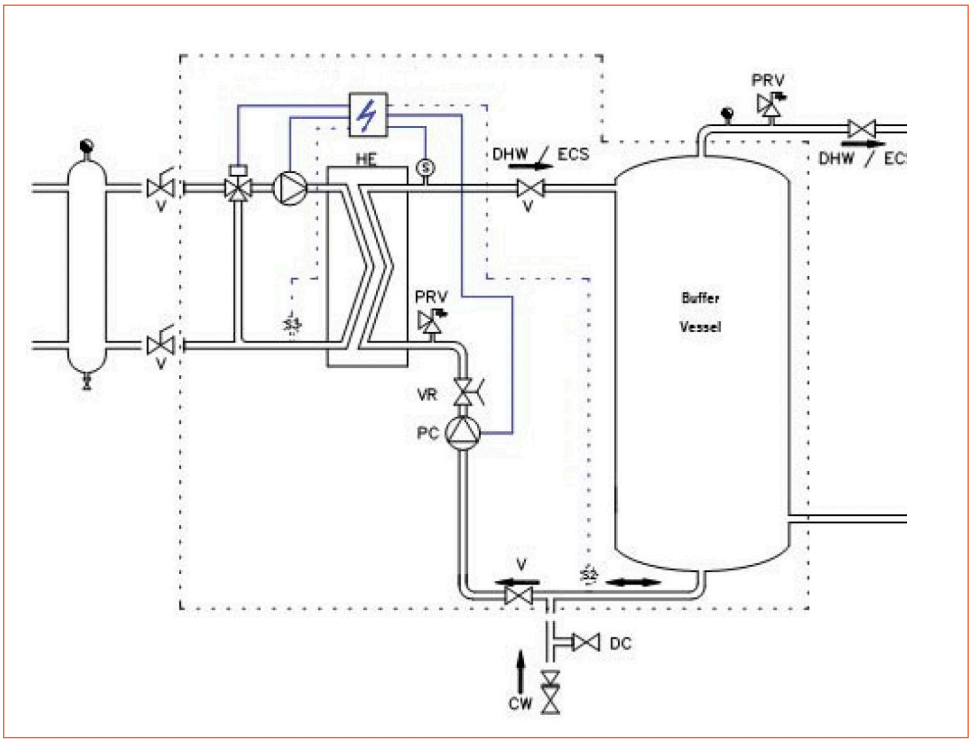

20. Annex 3

20.1 Addition to the installation and operating instructions - wiring of charging pump

The charging pump has not been wired previous to delivery.

You will find a cable with five wires connected to the control box that must be wire to the charging pump.

Please proceed as follow:

1. Ensure the system is not connected to the main power supply. If the control box is connected to the main power supply, ensure that the main switch is turned off and locked.
2. Open the electric box of the charging pump.
3. Wire as follows:

Yellow/Green wire to Earth	⏚
Blue wire to Neutral	N
Brown wire to Phase	L

4. With a UPS32-80N pump:
   To allow the pump to report Ipsothermic contact to the control box, wire the two black wires to the heating protection plug (mark 2 & mark 4). To proceed, remove the plug from its location.
5. Place the gland back in place to provide sealing of the cable.
6. Close the electric box of the pump.

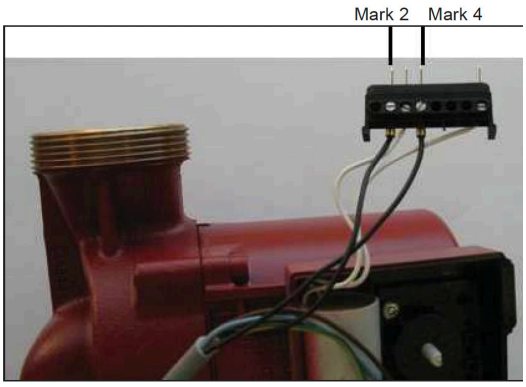

21. Annex 4

21.1 Special instructions for 2 port control valve - Option 1

Please refer to the guide supplied with the thermostatic control valve.

Always position the black slot upwards, see section 2.1

21.2 Special instructions for 2 port control valve - Option 2

The 3 points modulating valve, once fitted to its valve, has been factory-calibrated.
No special setting is needed.

21.2.1 Electrical Wiring

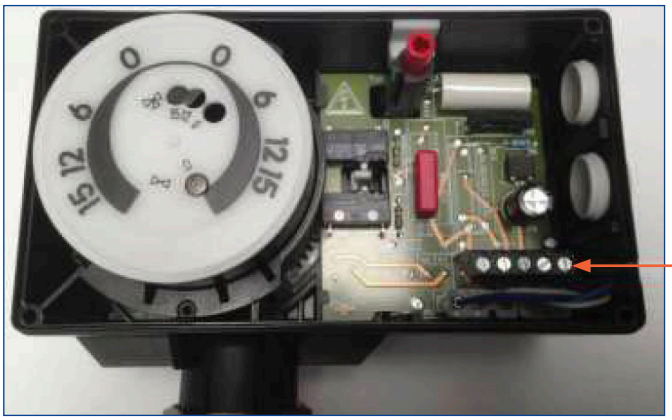

21.2.2 Wiring Diagram

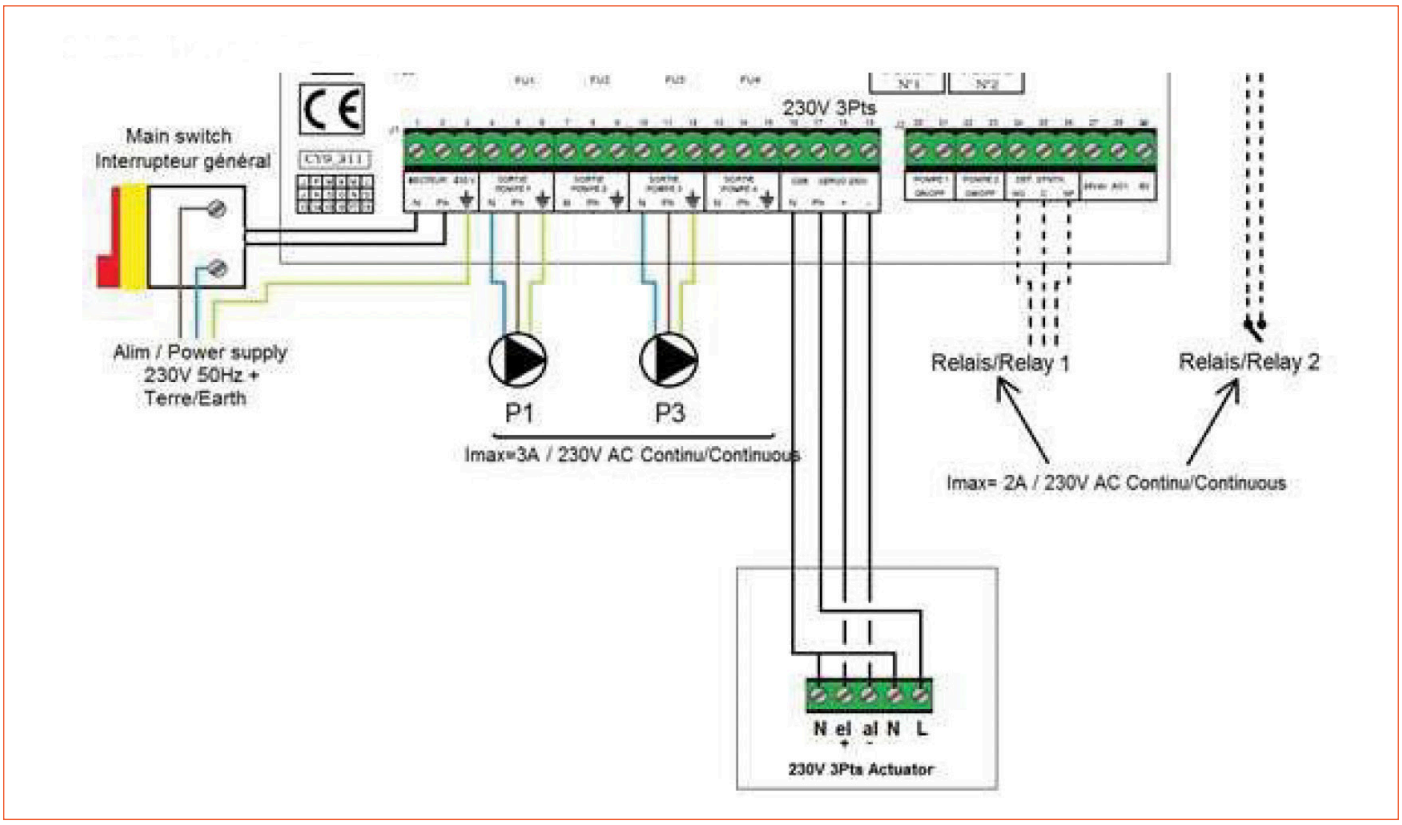

Ormandy Rycroft

Heating & Cooling Solutions

Duncombe Road,
Bradford, England BD8 9TB.

Telephone: +44 (0) 1274 490911. Email: sales@ormandygroup.com

www.ormandygroup.com